HGF

Low and High Voltage High Performance Electric Motor Range

Technical Catalogue
AUSTRALIA

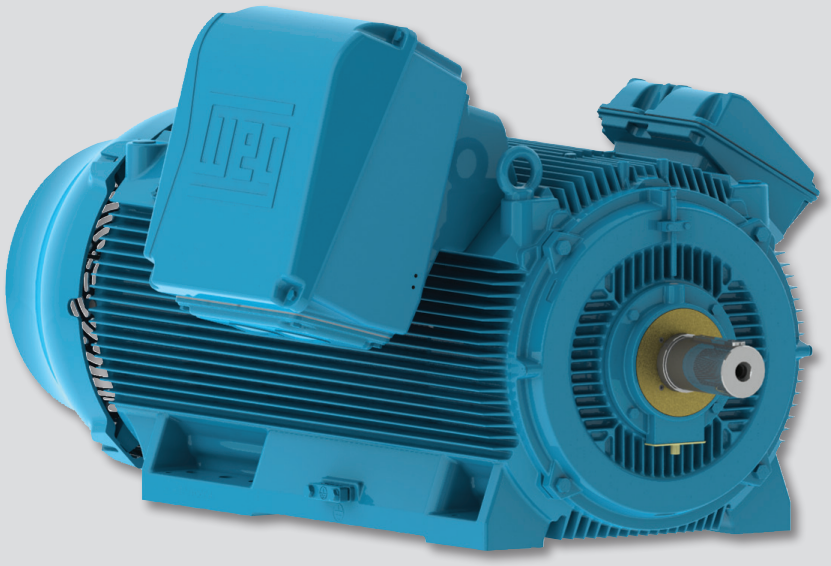

Table of contents

The WEG HGF line of high performance electric motors is designed for heavy duty industrial applications.

WEG's innovative engineering using state of the art technology designed this high efficiency, reliable product, which will effectively improve your plant uptime, reducing total cost of ownership.

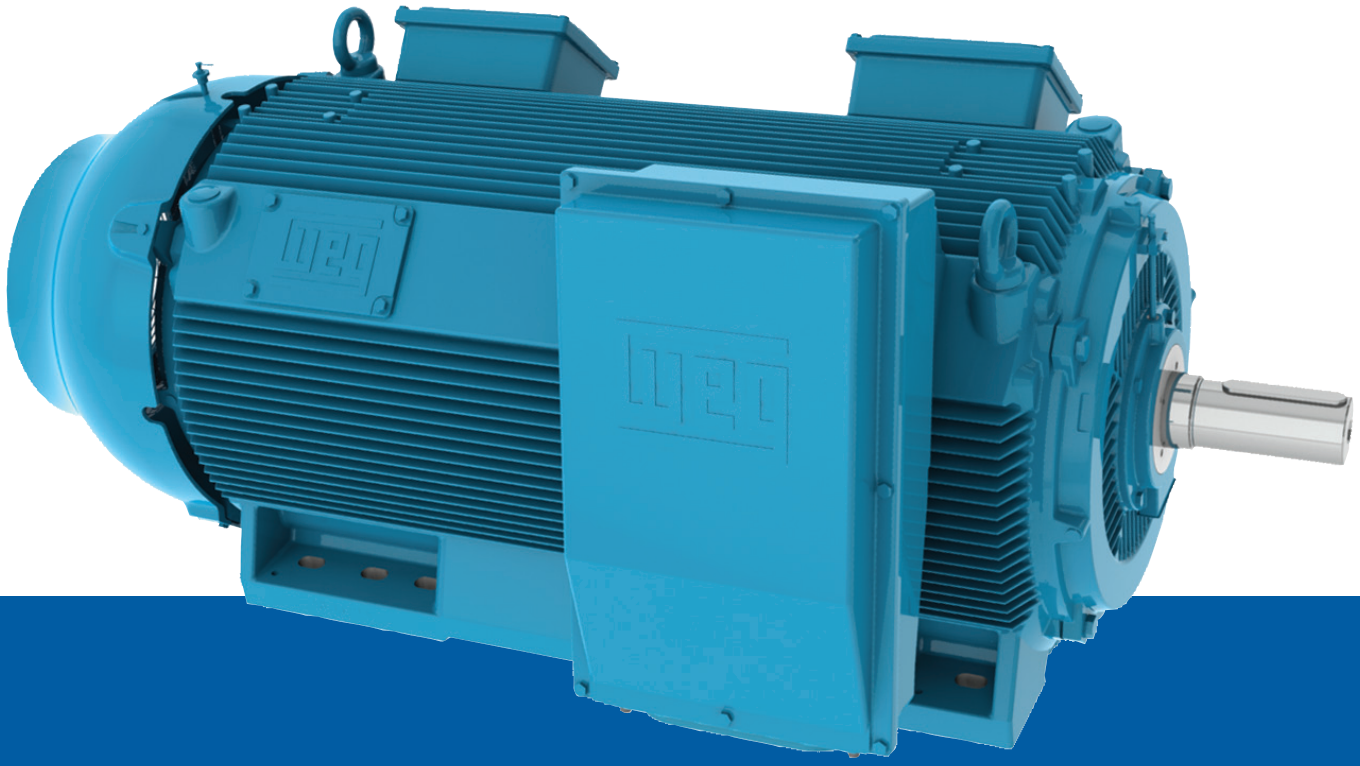

1. Introduction

HGF are high performance, compact electric motors widely sought after for their high reliability.

The frame, made of high grade one piece cast iron with external fins, provides maximum heat dissipation, superior mechanical strength, increasing the motor operating lifetime. The compact footprint, with one of the best kW/kg ratios in the world, reduces real estate requirements, transport and logistics costs.

HGF motors are designed in accordance with IEC/AS 60034 and IEC/AS 60072 standards, and are available in IEC 315 to 630 frames in low and high voltage (up to 11 kV).

The cooling system consists of an internal and an external fan, assuring maximum performance through a better temperature balance inside the motor, thus eliminating hot spots. Rotors are made of die cast aluminum or copper bars.

They are easily adapted to different applications due to their flexible design and can be customized to meet virtually all customer needs.

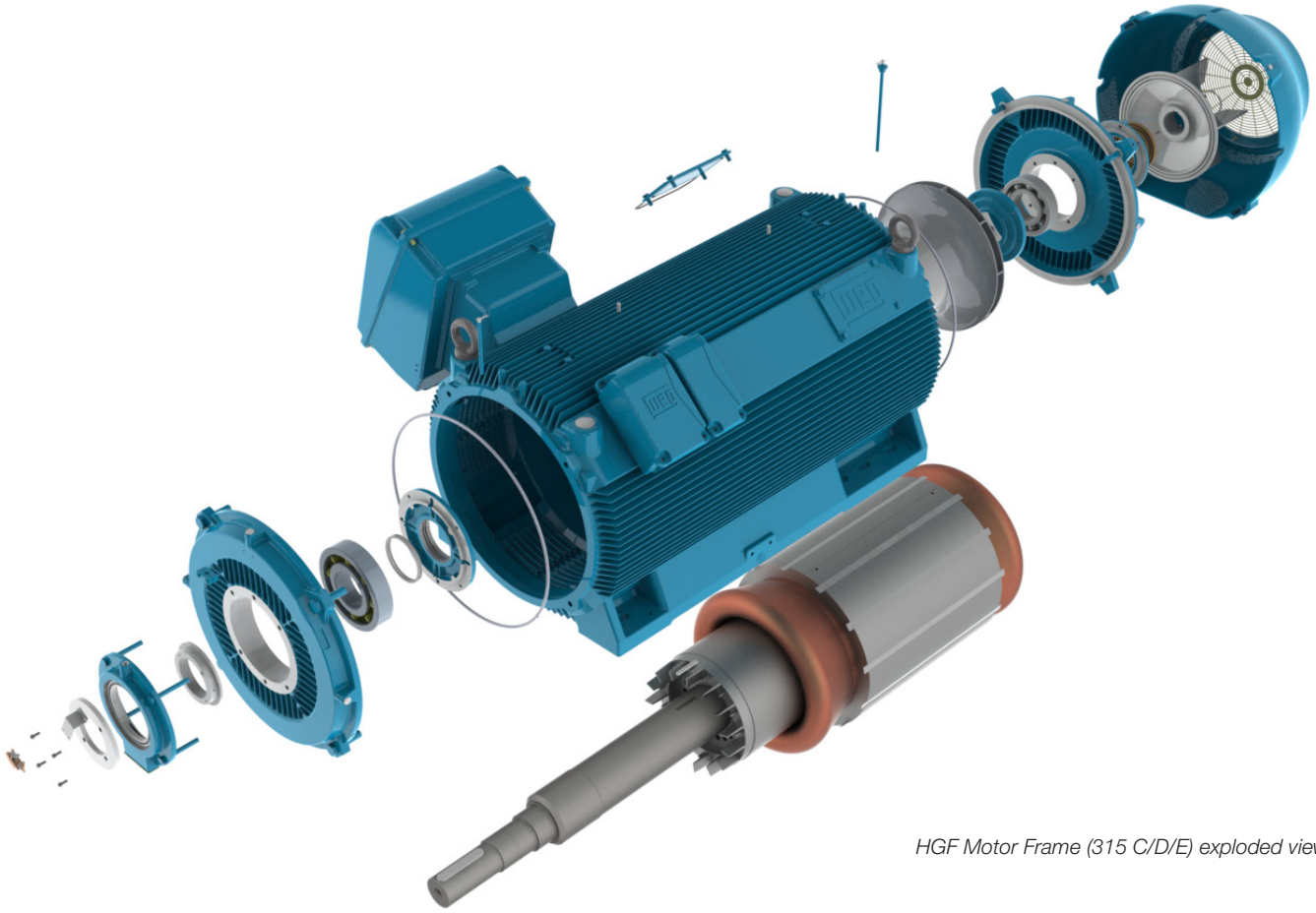

HGF Motor Frame (315 C/D/E) exploded view

Cast Iron Frame Construction

High mechanical and thermal performance

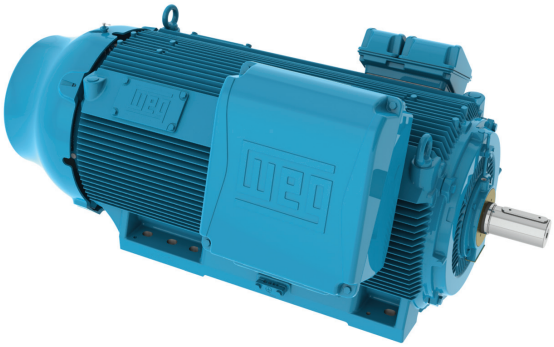

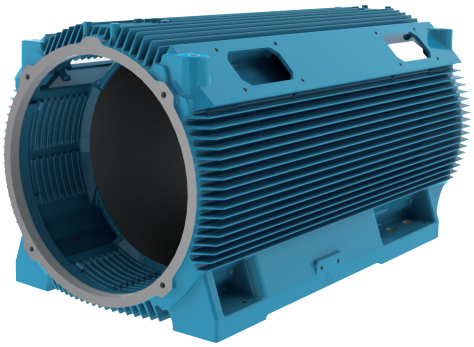

Suitable even for seismic conditions*

Vertical Motors

Simple, robust design for high thrust applications

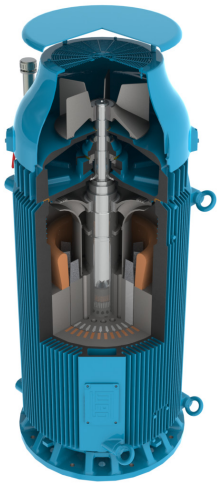

Rolling Element or Sleeve Bearings

Maximum bearing life and low on going maintenance costs.

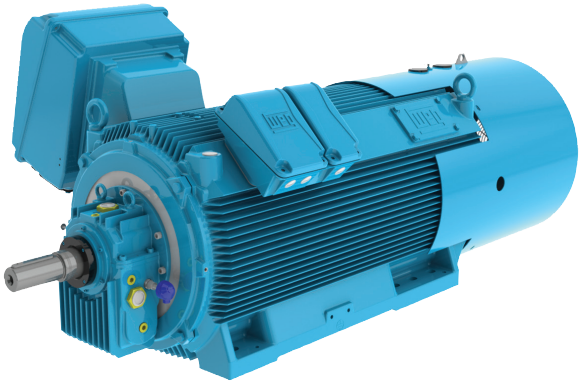

Sunshiled / Coalshield

Cover used within the mining industry, especially coal mining

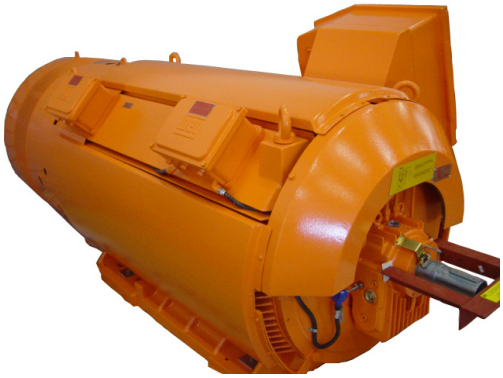

Cast Iron Fan Cover Design

Lower noise levels and higher mechanical strength

Codifications

HGF 315, 355 and 400 sizes have two frame lengths available, with 3 foot hole distances as follows:

HGF 315L/A/B and HGF 315C/D/E
HGF 355L/A/B and HGF 355C/D/E
HGF 400L/A/B and HGF 400C/D/E

A single frame length is used for frames 450 to 630 and 5 foot hole distances (L/A/B/C/D) each.
Frames are shown as: HGF 450, HGF 500, HGF 560 and HGF 630

*Contact WEG for more information.

Applications












Market Segments

The WEG HGF Line features (but not limited to) the following market segments:

Pulp and Paper
Steel Industry
Coal Mining
Mining Ferrous Metals
Mining Base Metals
Mining Rare Earths
Water & Sanitation
Onshore Oil & Gas
Offshore Oil & Gas
FPSO
LNG
Oil shale
Petroleum
Natural gas
Other Petrochemicals
Power Plants Nuclear
Power Plants Hydro or Thermal

2. Applicable Standards

Title	Applicable Standard
Rotating electrical machines, rating and performance	IEC 60034-1
Rotating electrical machines, Methods for determining losses and efficiency	IEC 60034-2
Dimensions and output series for rotating electrical machines	IEC 60072-1 e 2
Terminal markings and direction of rotation for rotating electrical machines	IEC 60034-8
Rotating electrical machines, Symbols for types of construction and erection	IEC 60034-7
Built-in thermal protection	IEC 60034-11
Rotating electrical machines, methods of cooling	IEC 60034-6
Rotating electrical machines, degrees of protection	IEC 60034-5
Rotating electrical machines, mechanical vibrations	IEC 60034-14
Rotating electrical machines, noise limits (1kW up to 5500kW)	IEC 60034-9
Rotating electrical machines, starting performance of induction cage motors up to 660V, 50Hz	IEC 60034-12
IEC standard voltages	IEC 60038
Rotating electrical machines, efficiency classes of single speed 3 phase cage induction motors	IEC 60034-30
Non-Sparking Motors	
Electrical Apparatus for Explosive Gas Atmospheres – Part 0: General Requirements	IEC 60079-0
Electrical Apparatus for Explosive Gas Atmospheres – Part 15: Type of Protection “N”	IEC 60079-15
Inverter Applications	
Rotating electrical machines, Guide for the design and performance of cage induction motors specifically designed for converter supply	IEC 60034-25
Rotating electrical machines, cage induction motors when fed from converters	IEC 60034-17
Ex-t Standards	
Explosive Atmosphere - Equipment dust ignition protection	IEC 60079-31
Explosive Atmosphere - General requirements	IEC 60079-0
API 541 Motors	
Form-wound squirrel cage induction motors – 500 horsepower and larger	API 541

* Motors can be built to suit any international, local or customer standard.

3. Construction Details

Enclosure

As standard, HGF Motors are totally enclosed fan cooled machines (IC411), according to IEC 60034-6. They are built as standard for IM B3 mounting as per IEC 60034-7. Flange and vertical mounted versions are available as an option.

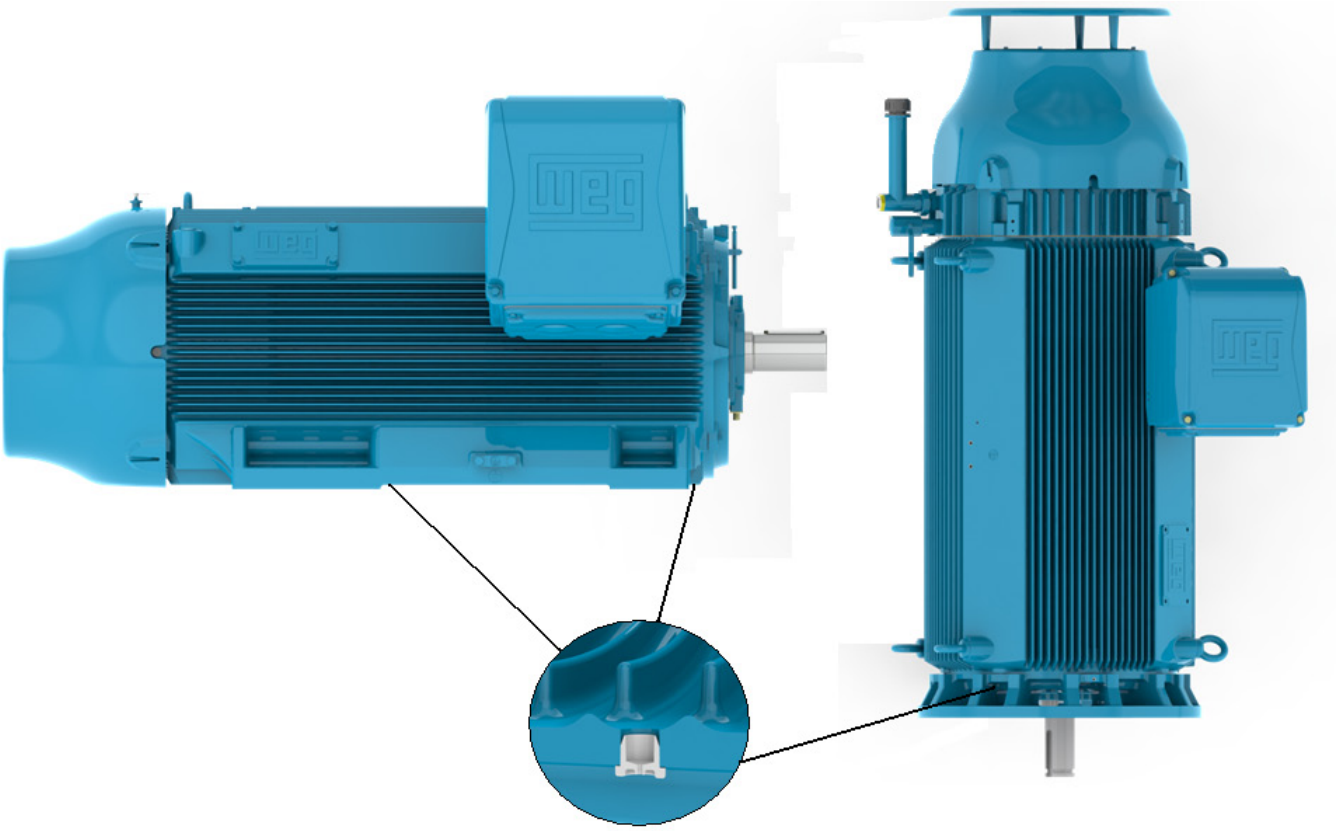

Figure 1- Drain positions for HGF Motors horizontal and vertical mounted.

The fastening and terminal box mounting bolts are Class 8.8 (ISSO 898/1), zinc plated. In the API 541 version, SAE 316 stainless steel fastening and terminal box mounting bolts are supplied.

Grounding lugs are supplied in the motor feet and are placed on both sides of the frame. The terminal boxes also have grounding lugs.

Non-sparking Ex n and API 541 motors have an earthing strap connecting the terminal box to the frame, as shown in figure 2.

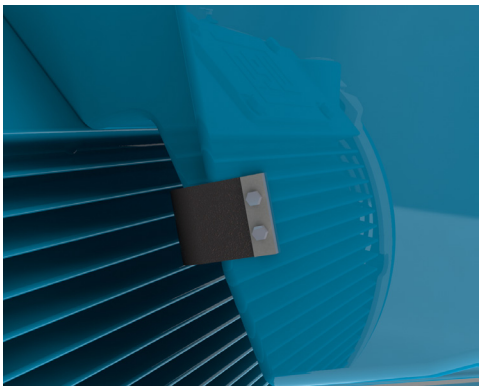

Figure 2 - Earthing strap used in Ex-n and API 541 motors.

4. Fan Cover

HGF motors of IEC frames 315L/A/B to 400C/D/E with anti-friction bearings without forced ventilation are supplied with cast iron fan cover as shown in figure 3.

Figure 3 -Cast Iron fan cover for anti-friction bearing motors

HGF Motors frames 450 to 630 and all motors fitted with sleeve bearings are supplied with steel fabricated fan covers, as shown in figure 4.

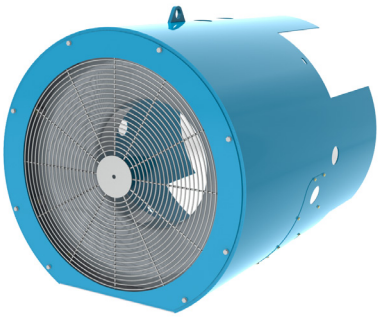

Figure 4 - Fabricated Steel fan cover

Made of FC-200 cast iron or pressed steel, the fan cover has an aerodynamic design, which results in a significant reduction of noise level and optimized air flow for improved heat dissipation. We recommend the use of a drip cover for outdoor vertical applications.

5. Terminal Box

Main and auxiliary terminal boxes are manufactured in FC-200 cast iron with generous internal space. They allow for 90° rotation, except when provided with lightning arrestor or surge capacitors. High Voltage main terminal boxes feature a pressure relief device.

Figure 5 - Standard Cast-iron HGF main terminal box

Low voltage motors are supplied with 6 leads mounted on a terminal block, allowing for direct on line (DOL) starting from the power grid or through Star/Delta starting (Consult WEG).

When motors are supplied with insulators the terminal box is made of fabricated steel.

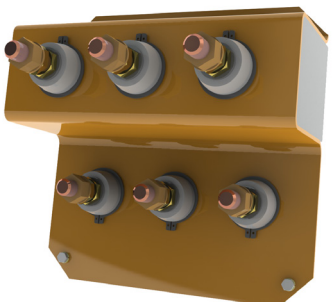

Figure 6 - Terminal block for low voltage motors (IEC)

High voltage motors are supplied with 3 leads connected to insulators inside the terminal block. On request, high voltage motors may have an extra terminal box, on the opposite side of the main terminal box, to accommodate the neutral point (star point).

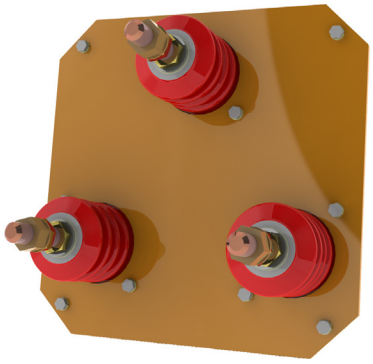

Figure 7 - Terminal block for high voltage motors (IEC)

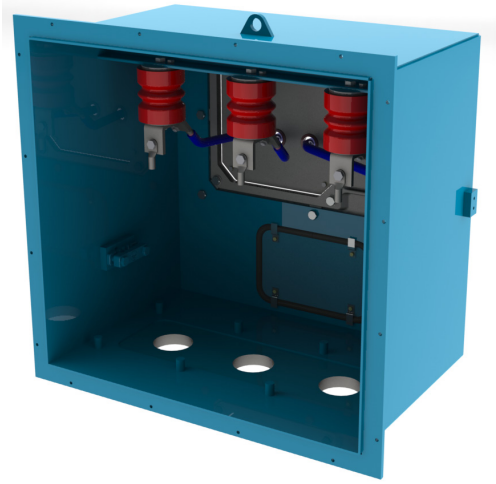

Figure 8 - High voltage terminal box

6. Stator Winding

The stator winding is made of high dielectric strength, class F insulation with 80K temperature rise, except when otherwise stated on the motor data sheet. Optionally, motors can be supplied with Class H insulation and /or lower temperature rise.

Low voltage motors are random wound with spike resistant wire and, from IEC frames 315 up to 450, are impregnated using the Continuous Resin Flow system, for superior dielectric strength. The percentage of retained solids is 2.5 times those of alternative impregantion systems, improving the motor's cororna inception voltage.

High voltage motors are form wound and impregnated using an epoxi based VPI system, which minimises partial discharge.

Winding protection is achieved by 2 sets of 3-wire PT-100 per phase and 1 set of space heaters supplied as standard. Other accesories are available on request.

6.1 Winding and accessories

The accessories leads are broughout to the auxiliary terminal box with two segregated compartments for PT-100 and space heater connections.

Figure 9 - Auxiliary terminal box with segregated compartments

7. Name Plates

HGF motor nameplates are supplied in accordance with IEC 60034-1 requirements. Additional nameplates with accessories data are also supplied.

Nameplates are made of stainless steel SAE 304 and the information is laser engraved. The motor serial number and manufacturing date are included in the main nameplate.

All nameplates are firmly fixed to cast iron parts (frame or auxiliary terminal box lid) by stainless stell rivets.

7.1 Main Nameplate

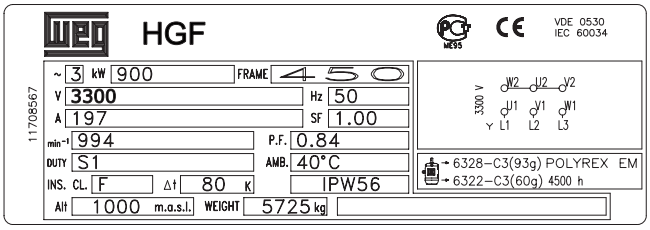

Figure 10 - Nameplate

7.2 Accessories Nameplate

a) PT-100

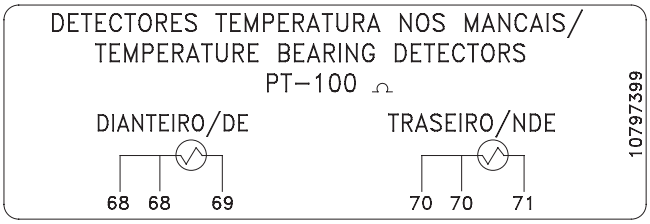

Figure 11 - Bearing PT-100 Nameplate

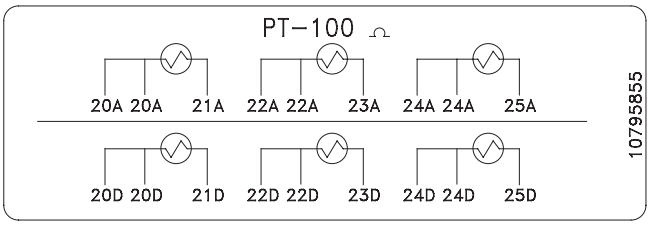

Figure 12 - Winding PT-100 Nameplate

b) Space Heater

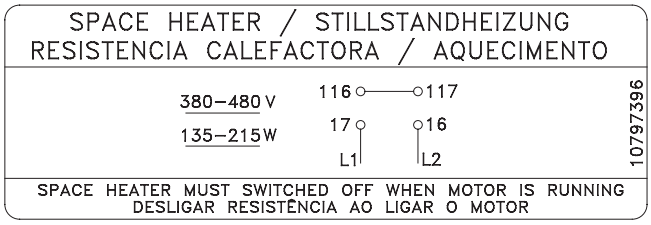

Figure 13 - Space Heater Nameplate

7.3 Warning Nameplates

HGF motors with rated voltage above 1000V are supplied with a safety warning nameplate.

Figure 14 - Warning nameplate used in high voltage motors

8. Cooling System, Noise and Vibration Level

8.1 Cooling System

Motors are generally totally enclosed fan cooled - TEFC (IC411) according to IEC 60034-6.

Non-ventilated (TENV) and Air Over (TEAO) versions are available on request. Forced ventilation (IC416) is also available as an option. More information about forced cooling ventilation can be found in the Variable Frequency Drive section (See item 24)

8.2 Noise Level

Fans are manufactured in cast aluminum and are unidirectional for 2 pole motors and bidirectional for other speeds. Other fan materials are available on request.

Unidirectional motors must have their direction of rotation clearly stated on the Purchase Order.

Tables 1 and 2 show the no-load sound pressure levels in dB(A) measured at 50 and 60 Hz, for cast iron fan cover. Tables 3 and 4 show the sound pressure levels in dB(A) at 50 and 60 Hz, for steel fabricated fan cover.

Special lower noise motor designs are available on request.

Frame	Cast Iron Fan Cover No-Load Sound Pressure Levels dB(A) to 50 Hz			
	2 Poles	4 Poles	6 Poles	8 Poles
315L/A/B and 315C/D/E	75	75	73	71
355L/A/B and 355C/D/E	82	79	77	75
400L/A/B and 400C/D/E	85	79	77	75

Table 1 - Sound Pressure Levels 50Hz motors with cast iron fan cover

Frame	Cast Iron Fan Cover No-Load Sound Pressure Levels dB(A) to 60 Hz			
	2 Poles	4 Poles	6 Poles	8 Poles
315L/A/B and 315C/D/E	79	79	77	75
355L/A/B and 355C/D/E	86	83	81	79
400L/A/B and 400C/D/E	89	83	81	79

Table 2 - Sound Pressure Levels 60Hz motors with cast iron fan cover

Frame	Steel Fabricated Fan Cover No-load Sound Pressure Levels dB(A) to 50 Hz			
IEC	2 Poles	4 Poles	6 Poles	8 Poles
315L/A/B and 315C/D/E	79	79	77	75
355L/A/B and 355C/D/E	86	83	81	79
400L/A/B and 400C/D/E	89	83	81	79
450	88	88	82	80
500	88	92	85	82
560	88	92	88	82
630	88	92	92	82

Table 3 - Sound Pressure Levels 50Hz motors with steel fan cover

Frame	Steel Fabricated Fan Cover No-load Sound Pressure Levels dB(A) to 60 Hz			
IEC	2 Poles	4 Poles	6 Poles	8 Poles
315L/A/B and 315C/D/E	82	85	82	80
355L/A/B and 355C/D/E	86	88	85	82
400L/A/B and 400C/D/E	89	88	85	82
450	92	92	88	82
500	92	92	88	85
560	92	92	92	85
630	92	92	92	85

Table 4 - Sound Pressure Levels 60Hz motors for steel fan cover

Under load, IEC 60034-9 defines an increase in the Sound Power Levels as shown below

Shaft Height	2 Poles	4 Poles	6 Poles	8 Poles
H = 315	2	3	5	6
H > or = 355	2	2	4	5

Table 5 - Maximum power sound level increase under load accoridng to IEC/AS 60034-9

Notes:

1. These numbers apply to both 50 Hz and 60 Hz.

2. The sound pressure level is measured with a sinusoidal supply. The increase in the sound pressure level with VFD varies with the switching frequency and may reach up to 11 dB(A).

9. Vibration Level

The vibration level of an electrical machine is dependant on its installation.

In order to evaluate the vibration of the motor itself, it is necessary to test it uncoupled according to the procedures described in IEC 60034-14. The acceptable vibration levels are defined by IEC 60034-14, for the uncoupled condition, and are classified in levels A and B, as per the table 6:

Vibration Level	Mounting	Displacement µ	Velocity mm/s	Acceleration mm/s²
A	Free Suspension	45	2.8	4.4
	Rigid Mounting	37	2.3	3.6
B	Free Suspension	29	1.8	2.8
	Rigid Mounting	24	1.5	2.4

Table 6 - Vibration Levels - IEC

Level A applies to machines without special vibration requirements. Level B applies to machines with special vibration requirements (customer requested). All rotors are dynamic balanced with half key and comply to Level A (API 541 motors comply with vibration level B). Level B is available on request.

For condition monitoring the endshields have three M8 threaded holes where vibration sensors can be installed. The threaded holes are positioned as shown in figure 15.

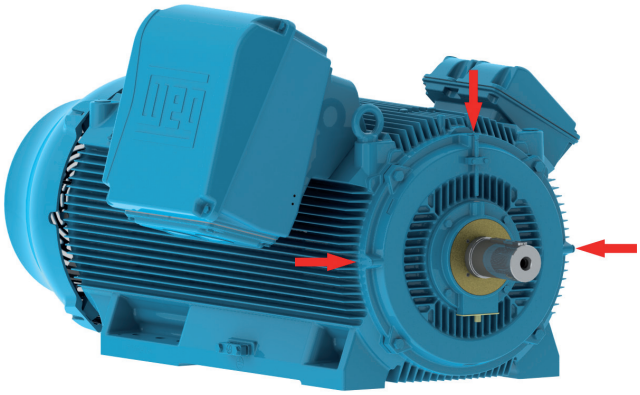

Figure 15 - Threaded holes position for vibration monitoring

On request, vibration sensors can be supplied.

10. Shaft Displacement Limits

According to IEC 60034-14 the shaft displacement measurement is only recommended for sleeve bearing machines with nominal speed in excess of 1200 rpm and with rated output above 1000 kW.

Sensor readings are influenced by mechanical factors and magnetic interferences of the shaft (runout).

The vibration of standard machines with sleeve bearings, considering the electrical and mechanical runout, shall not exceed the following limits:

Vibration Level	Speed Range (rpm)	Maximum displacement relative to the shaft (µ m)	Runout (µm) (peak to peak)
A	> 1800	65	16
	≤ 1800	90	23
B	>1800	50	12.5
	≤ 1800	65	16

Table 7 - Maximum displacement relative to the shaft

10.1 Limits for Standard Machines:

The limits of shaft displacement of standard machines with sleeve bearings, considering the electrical and mechanical runout, shall not exceed the following limits:

Synchronous Speed (rpm)	Maximum relative shaft displacement (peak to peak)
1801 - 3600	0.0028” (70µm)
≤ 1800	0.0035” (90µm)

Table 8 - Maximum shaft displacement for standard machines

10.2 Limits for Special Machines:

The limits of shaft displacement of rigidly mounted special machines with sleeve bearing, considering the electrical and mechanical runout shall not exceed the following limits:

Synchronous Speed (rpm)	Maximum relative shaft displacement (peak to peak)
1801 - 3600	0.0020” (50µm)
1201 - 1800	0.0028” (70µm)
≤ 1200	0.0030” (75µm)

Table 9 - Maximum shaft displacement for special machines

11. Shaft, Bearings and Loads

11.1 Shaft

The standard shaft material is high-tensile AISI 4140 and dimensions are in accordance with IEC 60072. All HGF motors have shaft with threaded center hole according to DIN 332 Part 4. The dimensions can be found in the Mechanical Data section of this catalogue.

Motors with standard shaft dimensions are supplied with type “A” key as per DIN 6885:1968. WEG can also supply, on request, motors with special shaft dimensions. A second shaft end extension and other shaft materials can also be supplied on request.

11.2 Bearings

Horizontal HGF Motors are supplied, as standard, with anti-friction ball bearings, with C3 clearance up to frame size IEC 500 for superior load capacity. Frames IEC 560 and 630 have a roller and a ball bearing arrangement.

All grease lubricated bearings are fitted with an efficient grease slinger system that ensures lower bearing temperature and superior lubrication performance. Re-lubrication can be done with the motor running. Bearings are fitted with Pt100 temperature sensors to ensure continuous temperature monitoring.

A taconite labyrinth seal arrangement effectively prevents the ingress of contaminants, even in harsh mining environments.

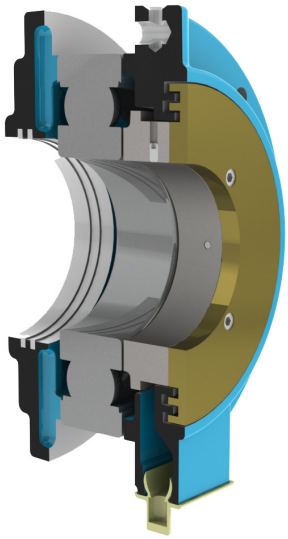

Figure 16 - Taconite Labyrinth Seal

HGF motors for vertical mounting can be supplied with two different bearing configurations:

- A standard version for low thrust loads with an antifriction ball bearing on drive end and an angular contact ball bearing on non-drive end
- A design for high thrust loads with grease lubricated ball bearings on drive end and oil lubricated spherical roller thrust bearing on non-drive end, comprising an oil bath system with natural or water cooling.

Figure 17 - High Thrust HGF vertical motor

HGF motors with grease lubricated bearings have a standard bearing life L10 > 40,000 hours. Longer L10 bearing life, eg L10 > 100,000, are available on request.

HGF motors can also be supplied with sleeve bearings. This bearing configuration ensures low maintenance and superior L10 life.

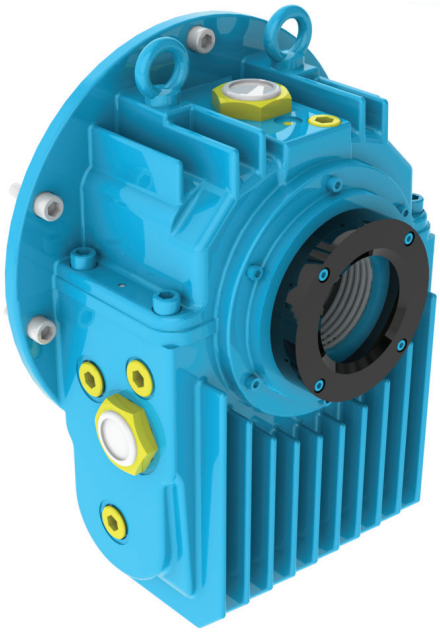

Figure 17 - Sleeve Bearing

Table 10 identifies the standard bearing size for each frame.

	Frame	Number of poles	Bearing		
	IEC		DE	NDE	NDE API
Horizontal Mounting	315L/A/B and 315C/D/E	2	6314	6314	6314
		4 - 8	6320	6316	6320
	355L/A/B and 355C/D/E	2	6314	6314	6314
		4 - 8	6322	6320	6322
	400L/A/B and 400C/D/E	2	6315	6315	6315
		4 - 8	NU224	6320	*
	450	2	6220	6220	*
		4 - 8	6328	6322	*
	500	4 - 8	6330	6324	*
	560	4 - 8	NU 232 + 6236	NU232	-
Normal thrust vertical mounting	630	4 - 8	NU236 + 6236	NU232	-
	315 L/A/B and 315 C/D/E	2	6314	7314	-
		4 - 8	6320	7316	-
	355 L/A/B and 355 C/D/E	2	6314	7314	-
		4 - 8	6322	7319	-
	400 L/A/B and 400 C/D/E	4 - 8	6324	7319	-
	450	4 - 8	6328	7322	-
	500	4 - 8	6330	7324	-
High thrust vertical mounting	315L/A/B and 315C/D/E	4 - 8	6320	29320	-
	355L/A/B and 355C/D/E	4 - 8	6322	29320	-
	400L/A/B and 400C/D/E	4 - 8	6324	29320	-
	450	4 - 8	6328	29320	6328
Horizontal mountings with sleeve bearings	315 L/A/B and 315 C/D/E	2	9-80	9-80	9-80
		4 - 8	9-90	9-90	9-90
	355 L/A/B and 355 C/D/E	2	9-80	9-80	9-80
		4 - 8	9-100	9-100	9-100
	400 L/A/B and 400 C/D/E	2	9-80	9-80	9-80
		4 - 8	11-110	11-110	11-110
	450	2	9-80	9-80	9-80
		4 - 8	11-125	11-125	11-125
	500	4 - 8	11-125	11-125	11-125
	560	TBA			
	630				

Table 10 - Standard bearing configurations

Note: Motors in frame size IEC 400C/D/E or larger vertically mounted (normal thrust) are available under request.

As an option, horizontal mounted motors with high radial loads can be supplied with NU series roller bearings, as per table 11.

Frame	Number of poles	Roller bearing
IEC		DE
315L/A/B and 315C/D/E	4 - 8	NU320
355L/A/B and 355C/D/E	4 - 8	NU3222
400L/A/B and 400C/D/E	4 - 8	NU324
450	4 - 8	NU328
500	4 - 8	NU330
560 and 630	Under request	

Table 11 - NU series roller bearings

12. Axial Locating Bearing

HGF motors horizontally mounted in frame sizes up to IEC 500 have anti-friction drive end ball bearings located axially. When vertically mounted, or when fitted with a roller bearing, the non-drive end bearing is axially located.

As an option, vertically mounted motors can have the drive end bearing located.

13. Transport Shaft Locks

All motors are shipped with a shaft locking device to prevent bearing damage during transportation. This device must be fitted at all times during transport.

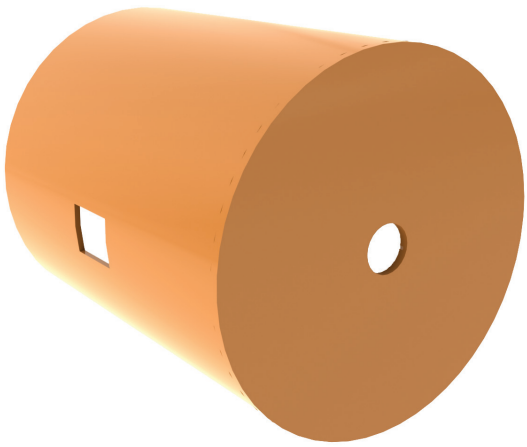

Figure 19 - Shaft locking device - rolling element bearings

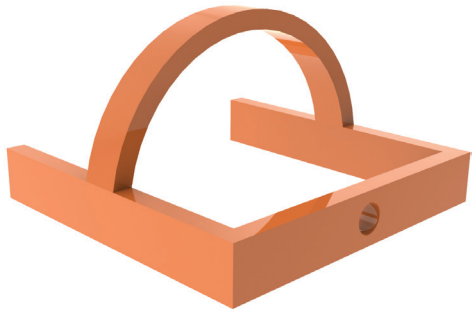

Figure 20 - Shaft locking device - sleeve bearings

14. Insulated Bearing

HGF motors in IEC frames 400 and above are supplied with insulated non-drive end bearing housing. This prevents bearing damage due to shaft currents. As an option, insulated bearings can be supplied in IEC frames 315 to 355.

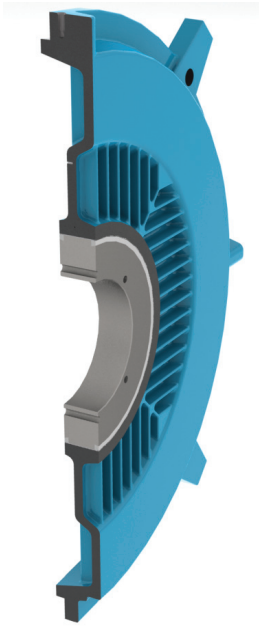

Figure 21 - Insulated endshield

A non-drive end insulated bearing housing and drive end shaft brush are mandatory when motors are VFD driven. VFD operation must always be clearly informed on the customers RFQ and Purchase Order.

Non-sparking "Ex n" motors have the non-drive end bearing insulated regardless of starting method. However they are not fitted with a shaft grounding brush. The same applies to Class 1 Div 2 motors.

API 541 motors have both bearing housings insulated and the drive end fitted with an earthing strap.

Vertically mounted motors for high axial thrust or motors fitted with sleeve bearings, have their NDE-bearing always insulated.

15. Lubrication - rolling element bearings

Bearing life depends on its type and size, on the axial and radial thrusts applied to it, environmental conditions (temperature and cleanliness), speed and grease life. Bearing life is, therefore, correlated to its correct application, maintenance and lubrication. By adhering to the prescribed grease type, quantity and lubrication intervals the designed bearing lifetime can be achieved. HGF motors are fitted with grease nipples for on the run bearing lubrication. The grease quantity and lubrication interval are specified on the nameplate and are shown on the tables below.

It is important to stress that excessive lubrication may also result in high bearing temperature which may affect bearing life.

Table 12 shows the standard greases and their main lubricating characteristics. Other compatible greases can be used, as specified in the motor installation manual. Always check the motor name plate for grease type

The use of greases not recommended by WEG may compromise bearing life.

Frame IEC	Number of poles	Lubricant	Lubricant specification
315L/A/B and 315C/D/E	2 - 8	Polyrex EM103	Grease with mineral oil and polyureia thickener, ISO VG 115
355L/A/B and 355C/D/E	2 - 8		
400L/A/B and 400C/D/E	2 - 8		
450	4 - 8		
	2	ISOFLEX NBU 15	Grease with synthetic oil and barium complex thickener, ISO VG 21
500	4 - 8	Stamina RL2	Grease with mineral oil an barium complex
560	4 - 8		
630	4 - 8		

Table 12 - Recommended greases. Always check motor nameplate for grease type.

The lubrication interval shown in the tables below are calculated considering ambient temperature of 40°C and horizontal mounting.

Important:

Operation in abnormal conditions, such as high ambient temperature, high altitude, axial or radial loads above those indicated in table 13 will result in changed lubrication intervals, different from those listed here. Contact WEG for more information.

Always check the grease type on motor nameplate prior to regreasing the motor as it may differ from table 12.

	Lubrication Interval - anti friction bearings									
	Frame	Number of poles	Bearing	Grease (g)	50 Hz	60Hz	Bearing	Grease (g)	50 Hz	60Hz
	IEC				(h)	(h)			(h)	(h)
Horizontal Mounting	315L/A/B and 315C/D/E	2	6314	27	3100	2100	6314	27	3100	2100
		4 - 8	6320	50	4500	4500	6316	34	4500	4500
	355L/A/B and 355C/D/E	2	6314	27	3100	2100	6314	27	3100	2100
		4 - 8	6322	60	4500	4500	6319	45	4500	4500
	400L/A/B and 400C/D/E	2	6315	30	2700	1800	6315	30	2700	1800
		4 - 8	6324	72	4500	4500	6319	45	4500	4500
	450	2	6220	31	2500	1400	6220	31	3000	1800
		4	6328	93	4500	3300	6322	60	4500	4500
		6 - 8				4500				
	500	4	6330	104	4200	2800	6324	72	4500	4500
		6 - 8			4500	4500				
	560	4	NU 232 + 6236	110	1300	800	NU232	70	1800	1000
		6		135	3600	2500			4400	3100
		8		160	4300	4300			4500	4500
	630	4	NU 236 + 6236	110	1300	800	NU232	70	1800	1000
		6		135	3600	2500			4400	3100
		8		160	4300	4300			4500	4500
Normal thrust vertical mounting	315 L/A/B and 315 C/D/E	2	6314	27	1700	1200	7314	27	1700	1200
		4	6320	50	4200	3200	7316	34	4500	4500
		6 - 8			4500	4500			4500	4500
	355 L/A/B and 355 C/D/E	2	6314	27	1700	1200	7314	27	1700	1200
		4	6322	50	3600	2700	7319	45	4500	3600
		6 - 8			4500	4500			4500	4500
	400 L/A/B and 400 C/D/E	4	6324	72	3200	2300	7319	45	4500	3600
		6			4500	4300			4500	4500
		8			4500	4500			4500	4500
	450	4	6328	93	2400	1700	7322	60	3500	2700
		6			4100	3500			4500	4500
		8			4500	4500			4500	4500
	500	4	6330	104	2100	1300	7324	72	3100	2200
		6			3800	3100			4500	4200
		8			4500	4200			4500	4500
Horizontal Mounting - Roller bearings	315 L/A/B and 315 C/D/E	4	NU 320	50	4300	2900	Contact WEG			
		6 - 8			4500	4500				
	355 L/A/B and 355 C/D/E	4	NU 322	60	3500	2200				
		6 - 8			4500	4500				
	400 L/A/B and 400 C/D/E	4	NU 324	72	2900	1800				
		6 - 8			4500	4500				
	450	4	NU 328	93	2000	1400				
		6			4500	3200				
		8			4500	4500				
	500	4	NU 330	104	1700	1000				
		6			4100	2900				
		8			4500	4500				

Table 13 - Lubrication Interval – rolling element bearings

16. Lubrication Vertically mounted / high axial thrust

Vertically mounted motors subject to high axial thrust require oil lubrication to ensure proper oil film and heat dissipation.

As standard, the non-drive end bearing is designed for oil bath lubrication system.

Table 14 illustrates the oil type to be used, it also specifies the lubrication intervals relative to the axial loads.

Frame IEC	Number of poles	Lubricant	Lubricant specification
315L/A/B and 315C/D/E	4 - 8	FUCHS Renolin DTA 40 / Mobil SHC 629	Mineral Oil ISO VG 150 with anti foaming and antioxidant
355L/A/B and 355C/D/E	4 - 8		
400L/A/B and 400C/D/E	4 - 8		
450	4 - 8		

Table 14 - Standard lubricant information

The drive end bearing is grease lubricated and follows the same recommendations as table 13.

	Frame IEC	Poles	Bearings	50 Hz (h)	60 Hz (h)	Thrust Bearing	Oil Qty (L)	50 Hz and 60 Hz (h)
Vertical High thrust bearings	315L/A/B and 315C/D/E	4	6320	4200	3200	29320	20	8000
		6		4500	4500			
		8						
	355L/A/B and 355C/D/E	4	6322	3600	2700	29320	26	
		6		4500	4500			
		8						
	400L/A/B and 400C/D/E	4	6324	3200	2300	29320	37	
		6		4500	4300			
		8		4500	4500			
	450	4	6328	2400	1700	29320	45	
		6		4100	3500			
		8		4500	4500			

Table 15 - Lubrication interval – high thrust bearings

17. Lubrication - Sleeve bearing

Sleeve bearings require less maintenance with longer lubrication intervals and ensure a longer bearing life, provided the motors are operated correctly using recommended lubricants.

Table 16 shows the type of sleeve bearing, amount of oil to be used and recommended lubrication intervals.

	Poles	Frame IEC	Bearing	50 and 60 Hz (h)	Oil Qty (L)	Lub	Lubricant spec.
Sleeve Bearing	2	315L/A/B and 315C/D/E	9-80	8000	2.8	Fuchs Renolin DTA 10	Mineral oil ISO VG 32 with anti foaming and antioxidant
		355L/A/B and 355C/D/E					
		400L/A/B and 400C/D/E					
		450					
	4,6 and 8	315L/A/B and 315C/D/E	9-90	8000	2.8	Fuchs Renolin DTA 10	Mineral oil ISO VG 46 with anti foaming and antioxidant
		355L/A/B and 355C/D/E	9-100				
		400L/A/B and 400C/D/E	11-110		4.7		
		450	11-125				
		500					

Table 16 - Lubrication interval – Sleeve bearings
(Always check the motor nameplate for oil type)

18. Bearing Thrust

The maximum applicable radial and axial loads for the standard bearing configuration are shown in tables 17-24. They consider bearing L10 life of 40,000 hours. The maximum radial load figures consider axial load as zero. Conversely, the maximum axial load figures consider radial load as zero.

The following points are considered in determining the maximum thrust allowed:

- Normal operating conditions;
- AISI shaft material;
- 2-pole motors: parabolic torque load (examples are fans, centrifugal pumps, centrifugal compressors, mixers, etc);
- Other than 2-pole motors: constant torque load (reciprocating compressors, hoists, cranes, reciprocating pumps, conveyor belts, etc)
- If there is any doubt about load torque requirements, please contact your nearest WEG office.
- The figures consider anti-frictional ball bearings, standard for horizontal mounted motors up to IEC 500.

18.1 Radial Loads

The load values indicated in tables 17-20 show maximum loads when the load being applied to the shaft end (L) are at half way along (L/2) the shaft.

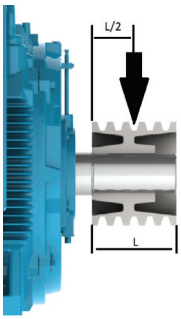

Figure 22 - Radial load position on shaft

50 Hz - Radial load in KN								
Frame	2 Poles		4 Poles		6 Poles		8 Poles	
IEC	L/2	L	L/2	L	L/2	L	L/2	L
315L/A/B and 315C/D/E	2	2	6	5	6	6	7	7
355L/A/B and 355C/D/E	1	1	5	5	7	6	7	7
400L/A/B and 400C/D/E	-	-	6	5	7	7	8	8
450	-	-	7	7	9	8	9	9
500	-	-	8	7	9	9	10	9

60 Hz - Radial load in KN								
Frame	2 Poles		4 Poles		6 Poles		8 Poles	
IEC	L/2	L	L/2	L	L/2	L	L/2	L
315L/A/B and 315C/D/E	2	2	5	5	6	5	7	6
355L/A/B and 355C/D/E	1	1	5	4	6	4	7	6
400L/A/B and 400C/D/E	-	-	5	5	6	6	8	6
450	-	-	7	6	8	8	9	9
500	-	-	7	6	9	5	10	10

Table 17 and 18 - Maximum radial load for ball bearings (no axial thrust)

50 Hz - Radial load in KN						
Frame	4 Poles		6 Poles		8 Poles	
IEC	L/2	L	L/2	L	L/2	L
315L/A/B and 315C/D/E	25	12	25	12	25	12
355L/A/B and 355C/D/E	28	14	18	7	17	7
400L/A/B and 400C/D/E	32	16	20	8	17	8
450	35	23	35	23	25	10
500	33	21	38	14	37	14
560	27	25	29	27	29	26
630	14	7	14	7	20	10

Table 19 - Maximum radial load for roller bearings (no axial thrust)

60 Hz - Radial load in KN						
Frame	4 Poles		6 Poles		8 Poles	
IEC	L/2	L	L/2	L	L/2	L
315L/A/B and 315C/D/E	25	12	25	12	25	12
355L/A/B and 355C/D/E	30	15	20	8	19	7
400L/A/B and 400C/D/E	32	16	23	12	19	8
450	33	22	24	9	24	9
500	26	17	21	17	21	17
560	24	23	26	25	26	24
630	28	18	22	11	36	18

Table 20 - Maximum radial load for roller bearings (no axial thrust)

Note:

Roller bearings require a minimum radial load to ensure correct operation. They are not recommended for direct coupling.

18.2 Axial Thrusts - Horizontal mounting (Standard Bearings)

The maximum axial thrusts (in kN) of horizontally mounted motors are shown in table 21.

Maximum Axial Thrust in the Shaft End		
Frame	Poles	Horizontal mounting
		Horizontal Mounting (Ball bearings)
IEC		Pulling or Pushing
		(kN)
315L/A/B and 315C/D/E	2	2
	4	5
	6	6
	8	7
355L/A/B and 355C/D/E	2	1 and 7
	4	6
	6	7
	8	7, 5
400L/A/B and 400C/D/E	2	1 and 7
	4	6
	6	7
	8	7 and 5
450	2	1
	4	5
	6	6
	8	7
500	4	5
	6	6
	8	7

Table 21 - Maximum axial thrust applicable to horizontally mounted HGF motors

18.3 Axial Thrusts - Vertical mounting

HGF motors when vertically mounted can be supplied as Normal or High Thrust.

18.3.1 Normal Thrust

This is the basic configuration fitted with angular contact ball bearing. The thrust bearing is located at the non-drive end, the maximum axial thrust is shown in the Table 22.

Maximum Axial Thrust in the Shaft End			
Frame IEC	Poles	Pulling (N)	Momentaneous pushing (N)
315L/A/B and 315C/D/E	2	*	*
	4	8000	5000
	6	8000	6000
	8	8000*	6000
355L/A/B and 355C/D/E	2	9000	*
	4	9000	6000
	6	9000	7000
	8	*	7000
400L/A/B and 400C/D/E	2	*	*
	4	10000	7000
	6	10000	7000 and 5000
	8	10000	7000 and 5000
450	2	*	*
	4	8000	7000
	6	8000	7000
	8	8000	7000
500	4	6000	5000
	6	6000	5000
	8	6000	5000

Table 22 - Maximum axial thrust applicable to HGF Normal Thrust motors.

(*) For more information contact your nearest WEG office

18.3.2 High Thrust

High axial thrust is available for motors up to 1800 rpm.

The NDE-bearing, lubricated by oil bath, has been designed to provide a rugged yet simple system with better thermal performance resulting in lower bearing operating temperatures.

The standard bearing life for high thrust, as per table 23, is 12,000 hours or more.

As an option, a non-reverse ratchet system and water cooling (Cooling Coil – CC) can be supplied.

For mineral oil lubrication, table 23 shows the maximum allowed axial thrust per frame size.

	Maximum Continuous down Thrust		
Frame	1800 RPM	1200 RPM	900 RPM
IEC	N	N	N
315L/A/B and 315C/D/E	45000	59000	65000
355L/A/B and 355C/D/E	50000	57000	61000
400L/A/B and 400C/D/E			
450			

Table 23 - Maximum continuous down thrust.

- maximum momentaneous up thrust is 30% of these values-

- all bearings are naturally cooled

- for higher loads/speeds please contact you nearest WEG Office

The HGF High Thrust line is designed to operate with different degrees of lubrication and cooling, with mineral (MO) or synthetic oil (SO). To increase the bearing life (12,000h) divide the maximum axial thrust values of table 23 by the derating factor shown in table 24.

Thrust derating factors		
L10h Life	Life in years	Factor
12,000	1.4	1.00
18,000	2.0	1.15
22,000	2.5	1.24
26,000	3.0	1.32
35,000	4.0	1.47
40,000	4.5	1.55
44,000	5.0	1.61
53,000	6.0	1.71
62,000	7.0	1.83
70,000	8.0	1.92
75,000	8.5	1.98
88,000	10.0	2.11
100,000	11.4	2.22

Table 24 - Thrust derating factors.

Higher L10h Life models are available as a special design.

19. Mounting

HGF mounting configuration complies with IEC 60034-7. Standard mountings and their variations are shown in figure 23.

A number code is used to define the mounting and terminal box position. The terminal box position is defined as viewed from the motor drive end shaft. Motors are deisgned to suit the requested mounting.

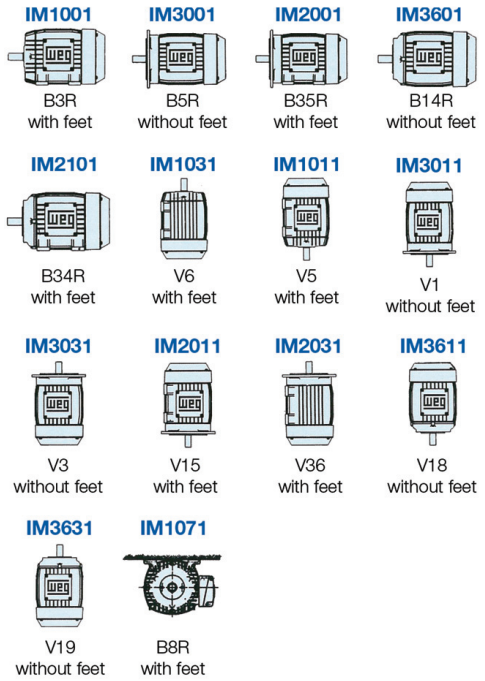

*Figure 23 - *Non defined mountings by IEC 60034-7*

B3R Terminal box on right side of the frame viewed from motor D.E.
B3L Terminal box on left side of the frame viewed from motor D.E.
B3T Terminal box on top of the frame.

20. Degree of Protection and Painting

20.1 Degree of Protection

In accordance to IEC 60034-5, the degree of protection of a rotating electrical machine consists of the letters IP followed by two characteristic numerals with the following meaning:

a) First characteristic numeral: referred to protection of people against live parts and contact with moving parts (other than smooth rotating shafts and the like) inside the enclosure and protection of the machine against ingress of solid and foreign objects.

b) Second characteristic numeral: protection of machines against harmful effects due to ingress of water.

HGF motors are supplied with IP55 degree of protection which means:

a) First characteristic numeral 5: dust-tight machine. The enclosure provides full protection against ingress of dust.

b) Second characteristic numeral 5: machine protected against heavy seas. Water from heavy seas or water projected in powerful jets shall not enter the machine in harmful quantities.

20.2 Other Degree of Protection

HGF motors can be supplied to suit different degrees of protection:

- IP56 for optimal protection against water;
- IP65 for optimal protection against dust.
- IP66 for optimal dust and water protection

20.3 Paint

HGF motors up to IEC frame 400 are painted according to WEG 214P paint plan (WEG code). This paint plan withstands a minimum 1000 (one thousand) hours salt spray test according to ASTM B117-03, and can be exposed to severe indoor and outdoor industrial environments, containing SO2, vapor and solid contaminants, high humidity and alkalis and solvents splashes.

HGF motors from IEC frames 450 and above are painted according to 212P paint plan (WEG code). This paint plan withstands a minimum 3000 (three thousand) hours salt spray and can be exposed to indoor and outdoor harsh marine and industrial marine environments containing high humidity.

A description of these paint plans and other options are shown below:

214P paint plan - standard up to IEC 400

Primer: one coat with 75 to 105 µm epoxy paint

Finishing: one coat with 70 to 100 µm polyurethane paint.

212P paint plan - standard from IEC 450 and up

Primer: one coat with 75 to 105 µm epoxy paint

Intermediate: one coat with 100 to 140 µm epoxy paint

Finishing: one coat with 70 to 100 µm polyurethane paint.

As an option the following painting plans can be supplied:

212E paint plan

This paint plan withstands a minimum 3000 (three thousand) hours salt spray and is suitable for indoor harsh marine or industrial marine environments, containing high humidity and alkalis and solvents splashes. This paint plan is recommended for use in pulp and paper, mining, and petrochemical industries.

Primer: one coat with 75 to 105 µm epoxy paint

Intermediate: one coat with 100 to 140 µm epoxy paint

Finishing: one coat with 100 to 140 µm epoxy paint.

213E paint plan

This paint plan withstands a minimum 3000 (three thousand) hours salt spray and is suitable for indoor or outdoor harsh marine or industrial marine environments, containing high humidity.

This paint plan is recommended to off-shore oil platforms.

Primer: one coat with 65 to 90 µm silicate ethyl paint

Intermediate: one coat with 35 to 50 µm epoxy paint

Finishing: one coat with 240 to 340 µm polyurethane paint.

20.4 Tropicalized Painting

High humidity can result in premature insulation deterioration. Any ambient with up to 95% relative humidity does not require additional protection, other than space heaters to avoid water condensation inside the motor.

However, for ambients with relative humidity above 95%, an epoxy paint is applied on all internal motor components. This is called tropic-proof painting.

21. Voltage Frequency

As per IEC 60034-1, the combination of voltage and frequency variations are classified as Zone A or Zone B as shown in figure 24.

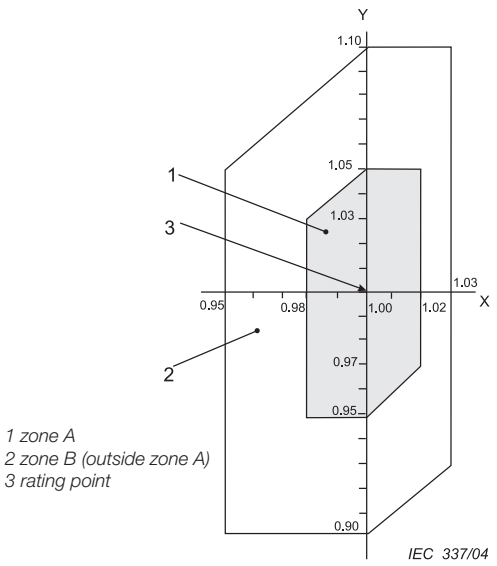

Figure 24 - Rated voltage and frequency limits for electric motors.

IEC 60034-1 states an electric motor must be suitable to perform its main function (supply torque) continuously in Zone A. However, under this condition the motor may operate at a temperature rise above it's rated value, due to power supply voltage and frequency variation.

The motor must also be suitable to perform its main function (supply torque) in Zone B, however significant performance changes will occur. Temperature rise will also be higher than Zone A. Long term operation within Zone B is not recommended.

22. Ambient x Altitude

According to IEC 60034-1, the rated motor output power of an S1 duty motor is the continuous duty operation at the following ambient conditions (unless otherwise specified)

- With temperature varying between -20°C to +40°C
- With altitudes up to 1000 meters above sea level

For other ambient temperatures and conditions the derating figures of table 22 must be applied in order to calculate the new maximum motor power (Pmax).

Electric motors are installed in many different environments, where the ambient temperature may vary widely. The mining industry, however, sets forth a more demanding requirement; the suitability to operate at higher ambient temperatures, usually around 45 or 55°C.

WEG HGF mining motors are designed with low temperature rise, high temperature grease, low bearing temperature and high grade insulation, and hence are mechanically and electrically sound to operate at ambient temperatures of 55°C at SF=1.0. HGF mining motors are available on request.

T (°C)	Altitude (m)								
	1000	1500	2000	2500	3000	3500	4000	4500	5000
10							0.97	0.92	0.88
15						0.98	0.94	0.90	0.86
20					1.00	0.95	0.91	0.87	0.83
25				1.00	0.95	0.93	0.89	0.85	0.81
30			1.00	0.96	0.92	0.90	0.86	0.82	0.78
35		1.00	0.95	0.93	0.90	0.88	0.84	0.80	0.75
40	1.00	0.97	0.94	0.90	0.86	0.82	0.80	0.76	0.71
45	0.95	0.92	0.90	0.88	0.85	0.81	0.78	0.74	0.69
50	0.92	0.90	0.87	0.85	0.82	0.80	0.77	0.72	0.67
55	0.88	0.85	0.83	0.81	0.78	0.76	0.73	0.70	0.65
60	0.83	0.82	0.80	0.77	0.75	0.73	0.70	0.67	0.62
65	0.79	0.76	0.74	0.72	0.70	0.68	0.66	0.62	0.58
70	0.74	0.71	0.69	0.67	0.66	0.64	0.62	0.58	0.53
75	0.70	0.68	0.66	0.64	0.62	0.60	0.58	0.53	0.49
80	0.65	0.64	0.62	0.60	0.58	0.56	0.55	0.48	0.44

Table 25 - Derating factors for ambient temperature and altitudes

23. WISE® Insulation System

23.1 Spike Resistant Wire

The industry has traditionally utilized 2 types of wire insulation: grade 2 (8 layers of standard enamel) and grade 3 (12 layers of standard enamel). This technology no longer meets the demands of modern drives, which created the need for advances in wire insulation. With the support of its chemical division, WEG has developed its own inverter rated enamel, resulting in the superior dielectric and mechanical properties of WEG's insulation.

Spike-resistant wire is a new technology developed as a result of studies on the effect of modern IGBT drives on AC motors. The secret is in the enamelling process, which ensures superior insulation in order to protect all turns against rapid voltage rise times (dV/dt).

Benefits: Guaranteed performance with latest drives, reliability, longer life expectancy

All HGF motors are supplied with WISE® (WEG insulation system evolution) insulation which includes spike-resistant enameled wire 200°C rated. The WISE® insulation system ensures long motor life.

The high voltage spikes and dV/dt generated by IGBT drives can reduce the life of a standard insulation by as much as 75%. Different to mains operation, where voltage surges may occur once in a while, VSD spikes can be impressed onto motor insulation thousands of times per second. A proper insulation system must be rated for use under continuous stress.

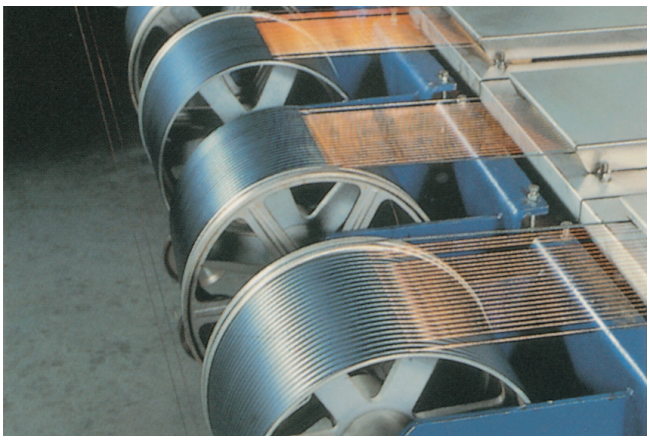

Figure 25 - spike resistant wire

WEG's WISE® insulation system is capable of withstanding voltage impulses of 1,600V peak and 5,200V/µs at a repetition rate of 5,000 times per second (5kHz), far superior to today's industry standard. The **WISE® insulation standard in all WEG HGF motors,** is the result of WEG's extensive research of the effects of drives on electric motors.

No doubt the benefits of this superior insulation are also invaluable for applications where voltage surges are a concern. For more information consult our technical papers.

23.2 Insulation class and temperature rise

The temperature inside the enclosure of an electric machine increases during operation. The temperature rise is defined at the design stage and is normally kept within the limits of class B temperature rise.

The ambient temperature considered in the design is 40°C according to IEC 60034-1 standard. The insulation material is normally rated Class F (155°C) – see table 26.

Thermal Reserve	25°C	155°C material class limit
Hottest - coldest point	10°C	
Temperature Rise	80K	
Ambient temperature	40°C	

Table 26 Rise Temperature ratings

Overheating must be avoided to ensure a longer motor life.

23.3 Thermal protection

Continuous duty motors must be protected from overload by a device embedded into the motor insulation or an independent protection system (usually a thermal overload relay with setting equal to or below the motor service factor times its rated current.

Service factor	Relay setting current
1.0 up to 1.15	In x SF
≥ 1.15	(In x SF) – 5%

Table 27 - Overload relay setting

HGF motors are fitted, with 2 sets of 3-wire Pt-100 in each phase and 1 set of 3-wire Pt-100 in each bearing.

PT-100 (RTD's)

These are temperature detectors (usually made of platinum, nickel or copper) whose operating principle is based on variation of electrical resistance with temperature. These calibrated resistances vary linearly with temperature, allowing continuous monitoring of motor heating process through an RTD relay with high precision rate and response sensitivity.

The same detector can be used for alarm (with operation above the regular operating temperature) and trip (usually set to the maximum temperature of the insulation class).

	Recommended Settings	
	Alarm	Trip
Winding	145ºC	155ºC
Rolling-element Bearing	90ºC	110ºC

Table 28 - Recommended thermal protection settings for HGF range.

Thermistor (PTC)

These are semi-conductor type thermal protectors with hyperbolic resistance variation when its set temperature is reached. This abrupt resistance increase blocks the PTC current, making the PTC relay operate, tripping the motor circuit breaker.

Thermistors are of small dimensions, do not wear and have quicker response time if compared to other thermal protectors. They do not, however, allow continuous motor temperature monitoring. Together with their relays, thermistors and RTD's provide full protection against overheating caused by single phasing, overload, under or over-voltage or frequent reversing operations.

WEG RPW - PTCE05 is an electronic relay intended to interface with PTC signals. For more information refer to our website www.weg.net/au.

Bimetallic thermal protectors

These are silver-contact thermal sensors, normally closed, that operate at a certain temperature. When their temperature decreases below a set point, they return to the original shape, allowing the silver contact to close again.

Bimetallic thermal protectors are series-connected with the main contactor coil, and they can be used either as alarm or trip. There are also other types of thermal protectors such as PT-1000 and KTY. Please contact WEG for more information. Please note: Heaters must only be turned on when the motor is de-energized.

23.4 Protection based on operating current

Motor overload results in gradual temperature increase, to which RTD's, PTC's and bimetallic sensors offer suitable protection. However, to protect motors against short-circuit and locked rotor currents fuses must be used. This type of protection is highly effective for locked rotor conditions. Alternatively electro-magnetic motor protection circuit breakers (MPCB's) can be used.

23.5 Space heaters

The use of space heaters is recommended in two situations:

- Motors installed in environments with relative air humidity up to 95% in which the motor may remain idle for periods greater than 24 hours;
- Motors installed in environments with relative air humidity greater than 95%, regardless of the operating duty. It should be highlighted that in this situation it is strongly recommended that an epoxy paint, known as tropicalized painting, be applied to the internal components of the motor.

The supply voltage for space heaters must be specified in the purchase order. For all frame sizes, HGF motors can be provided with space heaters suitable for 110-127 V, 220-240 V and 380-480 V. As an option, dual voltage heaters of 110-127 / 220-240 V can be supplied for all motor frame sizes.

Space heater power rating depends on the size of the motor as indicated in table 28:

Frame	Power Rating (W)
315 to 450	180
500	250
560	300
630	350

Table 29 - Space heater power rating

24. Applications with Variable Frequency Drives

Consideration regarding Rated Voltage

The stator winding is designed and tested to withstand the voltage impulse and transients inherent to VSD's. Different grades of insulation are used according to motor rated voltage and inverter-generated dV/dt. Refer to details in tables 30 & 31.

24.1 Low Voltage Motors

Motor rated voltage	Peak voltage on motor terminals (phase to phase)	dV/dt (*) on motor terminals (phase to phase)	Rise Time*	Time between consecutive pulses
VNOM ≤ 460 V	≤1600V	≤5200 V/µs	≥0.1 µs	≥6 µs
460 V < VNOM ≤ 575 V	≤1800V	≤6500 V/µs		
575 V < VNOM ≤ 690 V	≤2200V	≤7800 V/µs		

Table 30 - Low Voltage Motors VFD driven criteria

24.2 High Voltage Motors

Motor rated voltage	Source Type	Coil insulation (phase to phase)		Main insulation (phase to ground)	
		Peak voltage on motor terminals	dV /dt (*) on motor terminals	Peak voltage on motor terminals	dV /dt (*) on motor terminals
690 V < VNOM ≤ 4160 V	Power Grid	≤5900V	≤500 V/µs	≤3400 V	≤500 V/µs
	PWM (**)	≤9300V	≤2700 V/µs	≤5400 V	≤2700 V/µs
4160 V < VNOM ≤ 6660 V	Power Grid	≤9300V	≤500 V/µs	≤5400 V	≤500 V/µs
	PWM (**)	≤12700V	≤1500 V/µs	≤7400 V	≤1500 V/µs

Table 31 - High voltage HGF motors criteria

*** Reinforced insulation for VFD operation.*

Notes to low and high voltage motors:

1 – To minimise insulation stress it is recommended that the switching frequency is set to 5 kHz or below.

2 – If the above conditions are met (including the switching frequency) there is no need for filters.

3 – These criteria have been extracted from IEC 60034-17 and IEC 60034-25.

24.3 Torque restrictions on variable frequency drive (VFD) applications

When driving constant torque loads, self-ventilated variable frequency driven motors have their torque limited at sub-rated frequency due to ventilation reduction. The following derating factor must be applied (refer to figure 26 and IEC 60034-17).

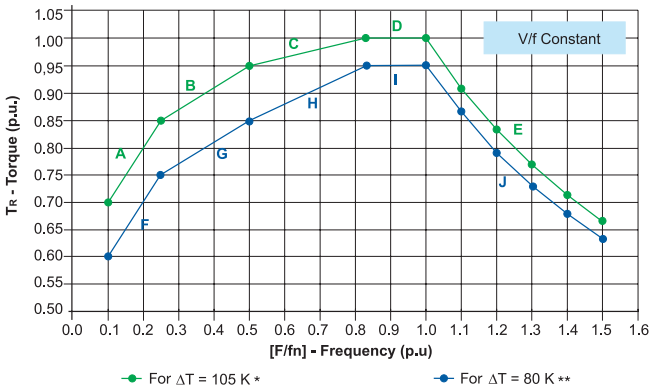

Figure 26 - Derating curve for constant torque

Derating to limit temperature rise to maximum temperature of insulation system*		
Interval	Limited by	Apply this equation
A	0.10 ≤ f/fn < 0.25	TR = (f/fn) + 0.60
B	0.25 ≤ f/fn < 0.50	TR = 0.40(f/fn) + 0.75
C	0.50 ≤ f/fn < 0.83	TR = 0.15(f/fn) + 0.87
D	0.83 ≤ f/fn ≤ 1.0	TR = 1.0
E	f/fn > 1.0	TR = 1/(f/fn)

Derating to keep temperature rise equal to mains operation**		
Interval	Limited by	Apply this equation
F	0.10 ≤ f/fn < 0.25	TR = (f/fn) + 0.50
G	0.25 ≤ f/fn < 0.50	TR = 0.40(f/fn) + 0.65
H	0.50 ≤ f/fn < 0.83	TR = 0.30(f/fn) + 0.70
I	0.83 ≤ f/fn ≤ 1.0	TR = 0.95
J	f/fn > 1.0	TR = 0.95/(f/fn)

Table 32 - Torque derating for constant torque operation below rated speed

(*) When the top green curve is applied the motor temperature rise may reach the maximum temperature of it's insulation material. For example, for class F motors, the temperature rise will be limited at 105 K. This curve can only be used for class F insulation and class B temperature rise motors in order to ensure that, when driven by frequency drive, the temperature rise remains within class F limits (below 105 K rise).

(**) When the lower blue curve is applied the motor temperature rise with a variable frequency drive will be the same as when driven by sinusoidal supply. In other words, class F insulation motors with class B temperature rise will remain with class B temperature rise(≤ 80 K) even when driven by variable frequency drives, which increase motor losses due to harmonics.

24.4 Bearing Currents

Common mode voltage, high dV/dt and high speed switching frequencies, inherent to any PWM drive, can generate shaft currents which circulate or discharge through the motor bearings. This electric current may also circulate through the driven load bearings. Left unchecked, the motor and/or driven equipment bearings may fail prematurely. There are three distinct mechanisms which may result in these destructive bearing currents, each requires specific mitigation measures.

This phenomenon is more noticeable in larger frame sizes (315 and above), and is less likely to occur in small motors. IEC 60034-17 recommends special bearing protection devices for motors of frame size 315 and above. Other entities, e.g. CSA and GAMBICA, suggest similar measures from frame 280.

WEG offers the use of an insulated bearing housing and shaft grounding brush, as well as proper Motor and Variable Speed Drive earthing recommendations, which effectively prevents PWM drive-induced bearing damage. When VSD use is specified by the customer, these additional protective devices are supplied as standard from 280 frame.

In all cases it is essential that the user adheres to the motor and VSD supplier's recommendations, especially with regards to installation, cabling and grounding. For a comprehensive guide, please refer to the WEG Technical Guide - *Induction motors fed by PWM frequency converters*, available from all WEG offices.

The use of an insulated bearing housing rather than insulated bearing provides many advantages such as the ability to use standard bearings throughout the motor life. This significantly decreases maintenance and logistic costs.

24.5 Mechanical speed

HGF line motors either VFD or DOL driven, shall not exceed 120% of momentaneous synchronous speed, unless otherwise stated in the motor datasheet

24.6 Forced Ventilation Kit

Where independent cooling is required HGF line motors can be supplied with a forced ventilation unit, as shown in figures 27 & 28.

This unit comprises of an independant electric motor providing a constant air flow over the motor fins regardless of the motor speed.

Figure 27 - Forced ventilation Unit – cast iron fan cover (Up to frame size 400)

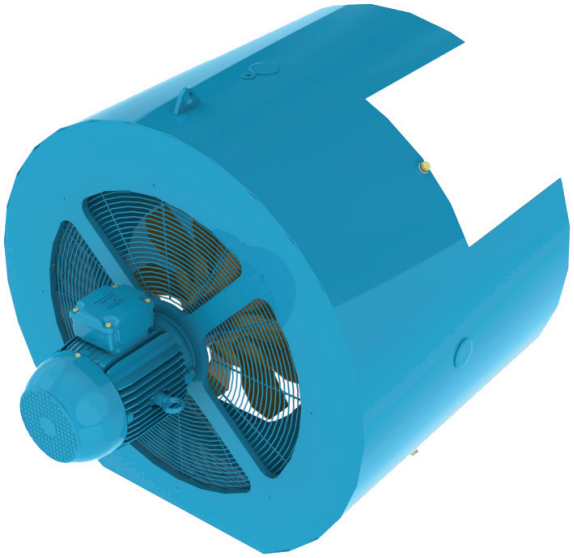

Figure 28 - Forced ventilation Unit – steel fan cover (For frame size 450 and above)

25. Special Accessories

HGF motors can be fitted with a wide range of accessories to suit any special requirement.

The following accessories are the most common and are available on request.

Non-reverse ratchet

Some applications do not allow rotation in both directions. One way to meet this requirement is to install a non-reverse ratchet which restricts the shaft in only one direction.

Encoder

Encoders can be fitted to motors with either forced ventilation or with shaft mounted cooling fan (TEFC). The following encoder models are available:

- Kübler - Model 5020 - 1024ppr (hollow shaft)
- Hubner Berlin - HOG 10 - 1024ppr (hollow shaft)
- Dynaphar - HS35 - 1024ppr (hollow shaft)

Other models can be supplied on request.

Note: The encoders described above are 1024 ppr. 2048 pulses per revolution are available on request.

Figure 29 - Dynapar HS35 Encoder

Lightining arrestors

High voltage HGF terminal boxes can be fitted with 1 set of lightining arrestors per phase. This equipment is manufactured according to IEC60099-4 standard and classified according to its voltage class: 3 kV, 6 kV, 9 kV or 12 kV.

Figure 30 - Surge arrestor

Surge Capacitors

High voltage HGF motors can be supplied with 1 set of surge capacitors per phase. They are assembled in the main terminal box and are recommended for installations subject to voltage surges or atmospheric discharges. The capacitors are enclosed by a stainless steel box with the following features:

- Capacitance – 0.5 μF
- Rated voltage – up to 7.2 kV
- Voltage Class – 15 kV

Figure 31 - Typical capacitor to HGF motors

Interchangeability solution

Drop in replacement solutions are available in the HGF motor line, which may be supplied with an intermediate base or extended feet for a complete interchangeability solution.

If a motor in frame size immediately higher (shaft height) than the standard is required (e.g. frame size 315 with shaft height of frame size 355), a motor with extended feet is supplied.

If a motor in two shaft heights immediately higher (e.g. frame size 315 with shaft height of frame size 400) is required, the motor is generally supplied with an intermediate steel base.

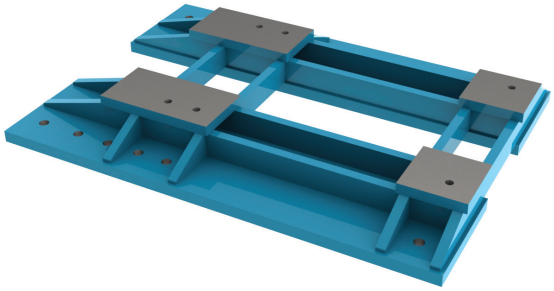

Figure 32 - Intermediate steel base plate

26. Exploded View

The exploded view below shows the main components of the HGF motor line. Information about the terminal boxes (main terminal box and accessory terminal boxes) are given in the specific dimensional table.

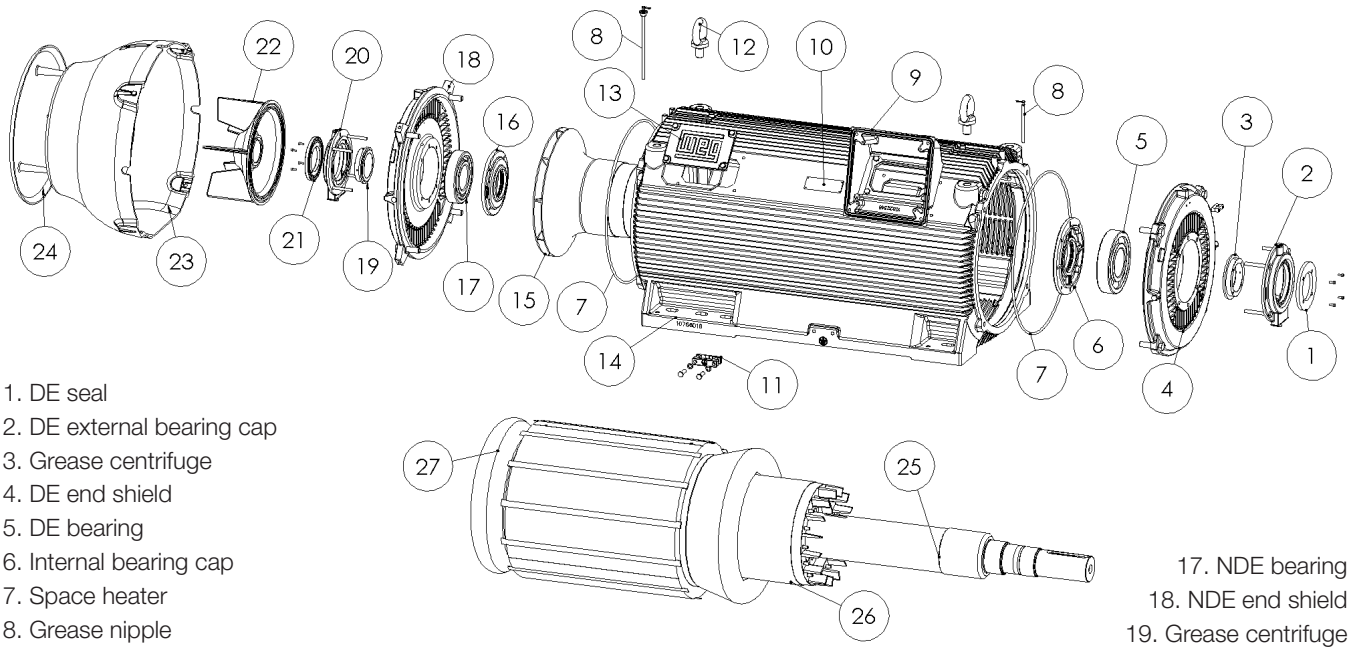

1. DE seal
2. DE external bearing cap
3. Grease centrifuge
4. DE end shield
5. DE bearing
6. Internal bearing cap
7. Space heater
8. Grease nipple
9. Main terminal box support
10. Motor nameplate
11. Grounding
12. Eyebolts
13. Sealing cover
14. Frame
15. Internal Fan
16. NDE Internal bearing cap
17. NDE bearing
18. NDE end shield
19. Grease centrifuge
20. NDE external bearing cap
21. NDE seal
22. Fan
23. Fan cover
24. Canopy
25. Shaft
26. Rotor
27. Stator

27. Product Range at a glance

Low & High Voltage

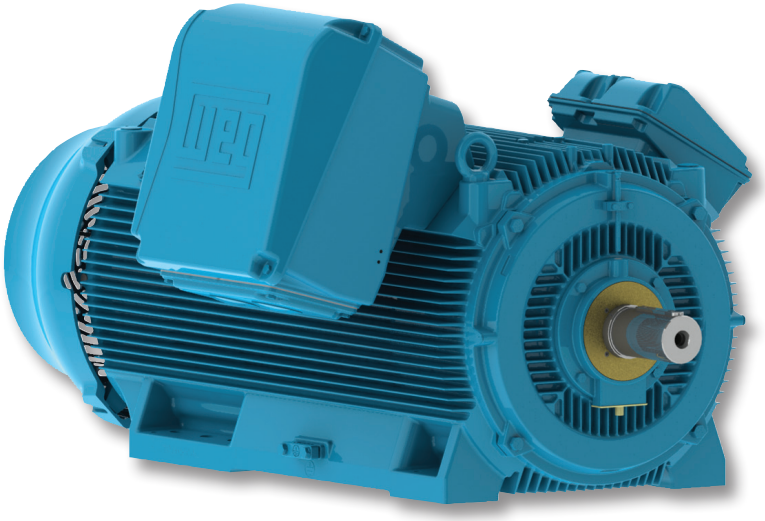

Product Range

Frames	315 to IEC630 or NEMA equivalent
Voltage	380V to 11,000V
Frequency	50 or 60Hz
Operating Speeds	2, 4, 6, 8, 10 & 12 poles
Ambient Temperature	40 degrees standard 60 degrees on request
IP Grades	IP55, IP56, IP65, IP66
Mounting	Any (B3R)
Starting Method	Any
Direction of Rotation	Unidirectional or both
VSD	Yes
Derating required	Yes, refer to WEG
Construction	High Grade FC-200 Cast Iron
Winding	Tropicalised with WISE® Spike-Resistant Wire
Fan Material	Aluminium or Fabricated Steel
Thermal Protection	2 sets of winding RTD's 1 set of bearing RTD
Heaters	Supplied as standard

Optional Features

Shaft	Double shaft extension Variable length or diameter
Flanges	Standard FF flanges Oversized or under sized
Bearings	Ball, roller, angular contact (thrust) bearings, oil lubricated or sleeve bearings
Terminal box	Standard right-hand side mounted (B3R) Also left or top mounted on request
Rotor	Die cast aluminium or copper bar
Vibration sensors	SPM or MEPA
Insulation Class	H
Thermal protection	Winding & bearing PTC or RTD
Fan Material	Cast Iron

*Denotes standard features with off-the-shelf product

28. H Line Features and Benefits

Terminal Box
Main and auxiliary terminal boxes are manufactured in FC 200 cast iron or steel with adequate room for mains and accessory leads. It can be rotated by 90° intervals, having one or more threaded cable entry points (Except when surge capacitors or lightning arrestors are fitted). HV main terminal boxes feature a pressure relief device.

Terminal Block
A terminal block is provided to suit the motor voltage and number of leads.

Bearings
Fitted with the highest quality bearings selected from the best suppliers in the world, designed to ensure long motor life, even under heavy working conditions. Roller bearings can be easily fitted for pulley couplings and sleeve bearings are available.

Endshields
WEG endshields are made of high-grade cast iron, enhanced with external fins for better heat dissipation providing increased bearing life. NDE insulated endshiels will be provided for VSD applications.

Seals
WEG HGF motors are available with labyrinth taconite seals providing protection against dusty and wet environments.

Nameplate
Our 316 grade stainless steel nameplate contains a complete and permanent record of all motor data for future reference. This includes motor serial number, electrical data, as well as bearing lubrication information.

Additional Nameplates
Motor also includes accessories, space heater, rotation direction and warning nameplates.

Fan
WEG's fan and fan cover design are instrumental at providing a low noise electric motor. Our fans are designed to ensure low motor temperature rise, thus minimising winding losses and increasing motor efficiency.

Fan cover
Made of cast iron for frames 315 up to 400 and of steel for frames 450 and above, offering superior mechanical rigidity, corrosion resistance and extended motor life.

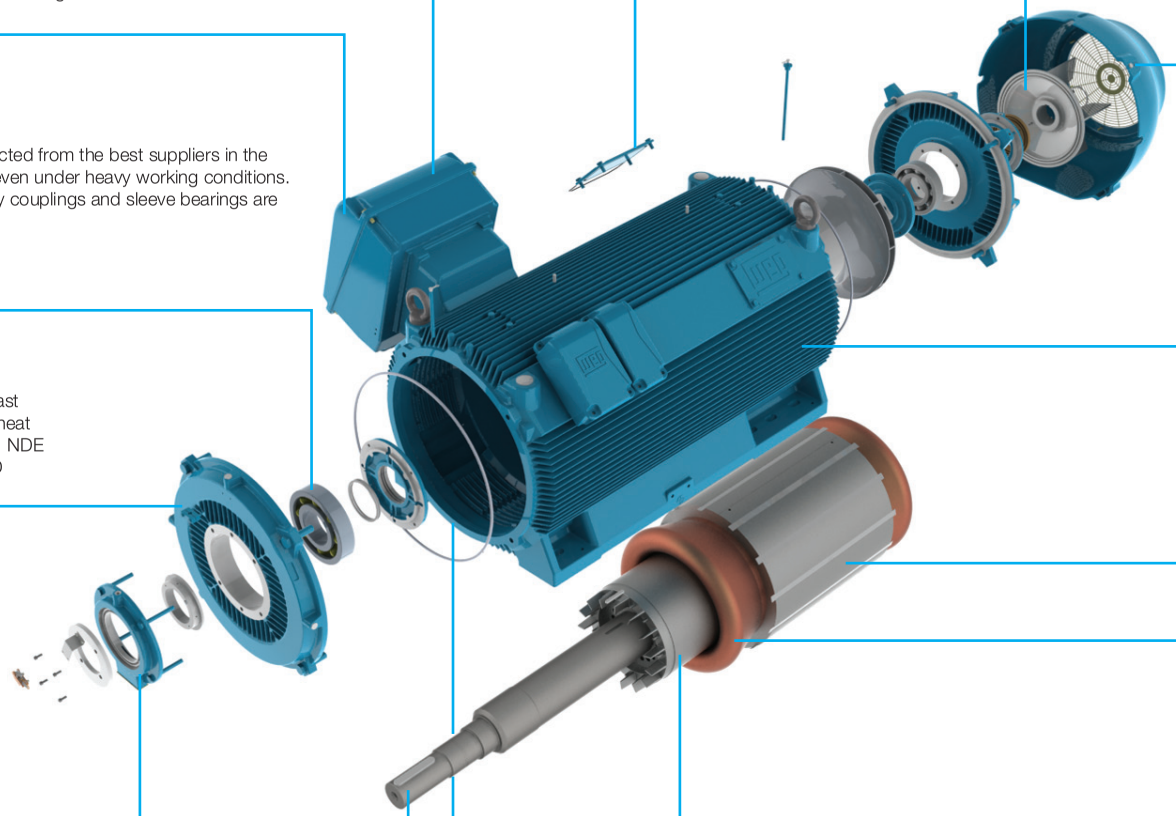

Frame
WEG motors are made of high grade cast iron. The frames are designed using finite element analysis to improve mechanical strength, heat dissipation and provide high pressure rating. WEG produces the largest cast iron frame in the world (630 frame).

Stator
Low loss laminations are used to improve electric characteristics, reducing electric losses and operating temperature.

Winding
WEG has developed a special insulation system to withstand voltage surges and transients of modern day applications. In addition, all LV motors are supplied with spike resistant wire and true inverter rated insulation.

Shaft
WEG HGF motor shafts are manufactured using AISI 4140 steel as standard, providing high mechanical strength, preventing flexing under load, minimising fatigue for a lifetime of superior performance.

Drain Hole
Supplied with plastic drain plugs to allow drainage of condensation water.

Rotor
Our die cast aluminium rotors offer lower inertia, higher starting torque, superior mechanical rigidity, cooler rotor temperatures and high speed capability. Thermo-chemically treated low electrical loss magnetic steel laminations yield high operating efficiency and enhanced reliability. Copper bar rotors are also available.

29. Performance Data - HGF Motors 415V

2 Pole - 3000 rpm - 50 Hz

Part No.	Output kW	IEC Frame	Rated speed (rpm)	Full load current I_r (A)	Locked rotor current I_L/I_r	Full load torque T_r (Nm)	Locked rotor torque T_L/T_r	Break-down torque T_b/T_r	415 V % of full load Efficiency η 50	75	100	Power factor (Cos φ) 50	75	100	Sound pressure level dB (A)	Moment of Inertia J (kgm²)	Max. locked rotor time(s) Cold	Hot	Approx Weight (kg)
HGF02000241	200	315C/D/E	2980	326	6.7	642	1.0	2.4	95.0	95.8	95.9	0.81	0.87	0.89	75	3.2	53	24	1640
HGF02500241	250	315C/D/E	2978	398	6.7	802	1.1	2.4	95.5	96.0	96.0	0.86	0.90	0.90	75	4.0	44	20	1850
HGF02800241	280	315C/D/E	2977	446	6.8	899	1.1	2.4	95.6	96.0	96.0	0.85	0.90	0.90	75	4.0	35	16	1850
HGF03150241	315	315C/D/E	2979	506	7.5	1010	1.2	2.5	95.7	96.2	96.3	0.85	0.90	0.90	75	4.5	31	14	1900
HGF03550241	355	355C/D/E	2976	563	6.5	1138	1.0	2.4	95.8	96.3	96.4	0.85	0.90	0.91	82	5.7	99	45	2590
HGF04000241	400	355C/D/E	2977	633	6.8	1285	1.0	2.4	96.0	96.3	96.5	0.85	0.90	0.91	82	6.4	99	45	2650
HGF04500241	450	355C/D/E	2978	712	7.0	1442	1.0	2.4	96.0	96.5	96.6	0.85	0.90	0.91	82	7.1	73	33	2900
HGF05000241	500	355C/D/E	2980	790	7.0	1599	1.1	2.4	96.1	96.6	96.7	0.85	0.90	0.91	82	7.9	77	35	2820
HGF05600241	560	400L/A/B	2980	896	7.1	1795	1.3	2.5	95.8	96.5	96.6	0.84	0.89	0.90	85	11.0	57	26	3500
HGF06300241	630	400L/A/B	2980	983	7.5	2021	1.3	2.5	96.0	96.6	96.7	0.85	0.90	0.91	85	12.9	57	26	3600

4 Pole - 1500 rpm - 50 Hz

Part No.	Output kW	IEC Frame	Rated speed (rpm)	Full load current I_r (A)	Locked rotor current I_L/I_r	Full load torque T_r (Nm)	Locked rotor torque T_L/T_r	Break-down torque T_b/T_r	415 V % of full load Efficiency η 50	75	100	Power factor (Cos φ) 50	75	100	Sound pressure level dB (A)	Moment of Inertia J (kgm²)	Max. locked rotor time(s) Cold	Hot	Approx Weight (kg)
HGF02500441	250	315C/D/E	1485	422	7.0	1609	1.3	2.5	95.0	95.6	95.8	0.76	0.83	0.86	75	5.8	37	17	1850
HGF02800441	280	315C/D/E	1485	472	7.0	1805	1.4	2.6	95.3	95.8	95.9	0.76	0.83	0.86	75	6.3	42	19	1900
HGF03150441	315	315C/D/E	1485	537	7.0	2031	1.5	2.7	95.3	95.9	96.0	0.75	0.82	0.85	75	7.0	35	16	2000
HGF03550441	355	315C/D/E	1485	598	7.0	2286	1.5	2.7	95.5	96.0	96.1	0.75	0.82	0.86	75	7.6	33	15	2050
HGF04000441	400	315C/D/E	1484	674	7.0	2580	1.6	2.7	95.7	96.1	96.1	0.75	0.83	0.86	75	8.5	33	15	2100
HGF04500441	450	355C/D/E	1489	745	6.5	2884	1.4	2.3	96.0	96.4	96.6	0.79	0.85	0.87	79	13.8	66	30	2900
HGF05000441	500	355C/D/E	1488	827	6.5	3208	1.5	2.4	96.2	96.5	96.7	0.77	0.85	0.87	79	15.3	57	26	3000
HGF05600441	560	400L/A/B	1488	936	7.0	3600	1.4	2.2	96.3	96.6	96.8	0.76	0.82	0.86	79	17.6	44	20	3700
HGF06300441	630	400C/D/E	1489	1050	7.0	4042	1.4	2.3	96.5	96.8	97.0	0.76	0.82	0.86	79	20.0	40	18	4500
HGF07100441	710	400C/D/E	1487	1190	7.7	4562	1.4	2.4	96.5	97.0	97.0	0.78	0.84	0.86	79	22.4	29	13	4650
HGF08000441	800	450	1492	1320	7.0	5121	0.7	2.5	95.8	96.6	96.8	0.76	0.84	0.87	88	22.0	44	20	5123
HGF09000441	900	450	1492	1480	7.0	5768	0.7	2.5	95.9	96.6	96.9	0.76	0.84	0.87	88	25.0	44	20	5420
HGF10000441	1000	450	1492	1650	7.0	6406	0.7	2.5	96.0	96.8	97.0	0.76	0.84	0.87	88	28.0	44	20	5720

Notes:
1) The values shown are subject to change without prior notice. To obtain guaranteed values contact your nearest WEG office.

2) Noise level is mean sound pressure at 1 metre as per AS 60034.9 standard.

29. Performance Data - HGF Motors 415V

6 Pole - 1000 rpm - 50 Hz

Part No.	Output kW	IEC Frame	Rated speed (rpm)	Full load current I_r (A)	Locked rotor current I_L/I_r	Full load torque T_r (Nm)	Locked rotor torque T_L/T_r	Break-down torque T_b/T_r	415 V % of full load Efficiency η 50	75	100	Power factor (Cos φ) 50	75	100	Sound pressure level dB (A)	Moment of Inertia J (kgm²)	Max. locked rotor time(s) Cold	Hot	Approx Weight (kg)
HGF01600641	160	315C/D/E	986	274	6.1	1550	1.3	2.5	94.4	94.6	94.7	0.73	0.82	0.86	73	7.5	44	20	1720
HGF01850641	185	315C/D/E	986	315	6.1	1795	1.4	2.5	94.5	94.8	94.9	0.73	0.82	0.86	73	8.8	35	16	1820
HGF02000641	200	315C/D/E	985	337	6.1	1942	1.4	2.5	94.8	95.0	94.9	0.77	0.85	0.87	73	9.5	37	17	1860
HGF02500641	250	315C/D/E	985	419	6.1	2423	1.5	2.5	95.0	95.4	95.3	0.77	0.85	0.87	73	11.4	31	14	1960
HGF02800641	280	355L/A/B	989	478	6.0	2708	1.3	2.5	95.0	95.7	95.8	0.73	0.82	0.85	77	13.1	62	28	2310
HGF03150641	315	355L/A/B	989	538	6.0	3041	1.3	2.5	95.3	96.0	95.9	0.73	0.82	0.85	77	14.3	57	26	2400
HGF03550641	355	355C/D/E	988	599	6.0	3434	1.3	2.5	95.7	96.0	96.0	0.75	0.83	0.86	77	16.0	59	27	2820
HGF04000641	400	355C/D/E	988	672	6.0	3865	1.5	2.5	95.9	96.3	96.3	0.75	0.83	0.86	77	17.6	53	24	2980
HGF04500641	450	400L/A/B	992	763	6.2	4336	1.3	2.3	96.1	96.5	96.5	0.73	0.81	0.85	77	22.0	44	20	3600
HGF05000641	500	400L/A/B	992	846	6.5	4817	1.3	2.3	96.3	96.7	96.7	0.73	0.82	0.85	77	24.8	35	16	3800
HGF05600641	560	400C/D/E	992	947	6.0	5396	1.4	2.3	96.4	96.8	96.8	0.71	0.81	0.85	77	27.9	35	16	4440
HGF06300641	630	450	993	1040	6.5	6063	0.8	2.4	96.5	96.6	96.6	0.77	0.84	0.87	85	33.0	44	20	5100
HGF07100641	710	450	993	1180	6.5	6828	0.8	2.4	96.5	96.6	96.6	0.77	0.84	0.87	85	37.4	44	20	5420
HGF08000641	800	450	994	1320	6.5	7691	0.8	2.4	96.6	96.7	96.7	0.77	0.84	0.87	85	41.9	44	20	5720
HGF09000641	900	450	994	1484	6.7	8651	0.8	2.4	96.6	96.8	96.8	0.77	0.84	0.87	85	44.2	44	20	5870

8 Pole - 750 rpm - 50 Hz

Part No.	Output kW	IEC Frame	Rated speed (rpm)	Full load current I_r (A)	Locked rotor current I_L/I_r	Full load torque T_r (Nm)	Locked rotor torque T_L/T_r	Break-down torque T_b/T_r	415 V % of full load Efficiency η 50	75	100	Power factor (Cos φ) 50	75	100	Sound pressure level dB (A)	Moment of Inertia J (kgm²)	Max. locked rotor time(s) Cold	Hot	Approx Weight (kg)
HGF01600841	160	315C/D/E	738	286	5.7	2070	1.2	2.3	94.3	94.9	94.9	0.68	0.78	0.82	71	10.1	48	22	1850
HGF01850841	185	315C/D/E	738	330	5.7	2394	1.2	2.4	94.6	95.1	95.1	0.70	0.79	0.82	71	11.9	55	25	2000
HGF02000841	200	315C/D/E	739	357	5.7	2590	1.2	2.5	94.7	95.2	95.2	0.68	0.78	0.82	71	12.9	42	19	2100
HGF02500841	250	355L/A/B	742	443	5.5	3218	1.2	2.4	95.0	95.7	95.7	0.67	0.76	0.82	75	17.6	46	21	2450
HGF02800841	280	355C/D/E	742	496	5.5	3610	1.2	2.3	95.3	95.8	95.7	0.70	0.78	0.82	75	20.1	48	22	2820
HGF03150841	315	355C/D/E	742	558	5.5	4052	1.2	2.4	95.4	95.8	95.8	0.68	0.77	0.82	75	22.3	42	19	2980
HGF03550841	355	400L/A/B	743	637	6.8	4562	1.2	2.5	94.8	95.4	95.7	0.66	0.77	0.81	75	28.1	48	22	3390
HGF04000841	400	400L/A/B	743	716	6.8	5140	1.2	2.5	94.9	95.6	95.9	0.66	0.77	0.81	75	32.8	48	22	3600
HGF04500841	450	400L/A/B	743	805	6.8	5788	1.2	2.5	95.0	95.7	96.0	0.66	0.77	0.81	75	37.3	44	20	3800
HGF05000841	500	400C/D/E	743	893	6.8	6426	1.2	2.5	95.2	95.9	96.2	0.66	0.77	0.81	75	44.3	48	22	4640
HGF05600841	560	450	745	964	5.9	7181	0.8	2.2	95.8	96.2	96.3	0.71	0.80	0.84	80	60.2	57	26	5875
HGF06300841	630	450	744	1060	6.1	8093	0.8	2.2	96.0	96.4	96.5	0.74	0.82	0.86	80	64.6	57	26	6080

Notes:
1) The values shown are subject to change without prior notice. To obtain guaranteed values contact your nearest WEG office.

2) Noise level is mean sound pressure at 1 metre as per AS 60034.9 standard.

29. Performance Data - HGF Motors - 3,300V

2 Pole - 3000 rpm - 50 Hz

Part No.	Output kW	IEC Frame	Rated speed (rpm)	Full load current I_r (A)	Locked rotor current I_L/I_r	Full load torque T_r (Nm)	Locked rotor torque T_L/T_r	Break-down torque T_b/T_r	415 V % of full load Efficiency η 50	75	100	Power factor (Cos φ) 50	75	100	Sound pressure level dB (A)	Moment of Inertia J (kgm²)	Max. locked rotor time(s) Cold	Hot	Approx Weight (kg)
HGF02000233	200	315C/D/E	2973	41.7	6.2	647	1.0	2.2	93.8	94.1	94.2	0.84	0.88	0.89	75	3.5	33	15	1780
HGF02200233	220	315C/D/E	2974	44.6	6.5	706	1.0	2.2	94.0	94.7	94.7	0.83	0.88	0.89	75	3.6	33	15	1820
HGF02500233	250	315C/D/E	2975	51.7	7.0	804	1.2	2.5	94.3	95.0	95.0	0.82	0.88	0.89	75	3.8	26	12	1900
HGF02800233	280	315C/D/E	2975	57.9	6.3	903	1.0	2.2	94.5	95.0	95.0	0.84	0.88	0.89	75	4.0	26	12	1900
HGF03150233	315	355C/D/E	2975	65.3	6.5	1010	1.0	2.2	93.7	94.6	94.8	0.83	0.88	0.89	82	5.5	44	20	2590
HGF03550233	355	355C/D/E	2975	73.5	6.5	1138	1.0	2.2	94.0	94.8	95.0	0.83	0.88	0.89	82	5.8	40	18	2650
HGF04000233	400	355C/D/E	2975	82.5	6.9	1285	1.0	2.3	94.6	95.2	95.3	0.83	0.88	0.89	82	6.9	40	18	2830
HGF04500233	450	400L/A/B	2980	93.8	6.7	1442	1.3	2.5	94.3	95.3	95.4	0.80	0.86	0.88	85	10.3	35	16	3460
HGF05000233	500	400L/A/B	2980	104	6.7	1599	1.3	2.5	94.8	95.6	95.6	0.79	0.85	0.88	85	10.3	35	16	3460
HGF05600233	560	400L/A/B	2980	116	7.0	1795	1.3	2.5	94.9	95.8	95.9	0.80	0.86	0.88	85	11.0	35	16	3690
HGF06300233	630	400C/D/E	2980	129	7.2	2021	1.3	2.5	95.2	96.0	96.0	0.81	0.86	0.89	85	13.0	35	16	4460
HGF07100233	710	450	2986	143	6.6	2276	0.7	2.2	95.3	96.0	96.2	0.86	0.89	0.90	88	22.1	48	22	5000
HGF08000233	800	450	2986	161	6.6	2560	0.7	2.2	95.4	96.1	96.3	0.86	0.89	0.90	88	23.7	48	22	5275
HGF09000233	900	450	2987	181	7.2	2874	0.7	2.3	95.6	96.3	96.5	0.86	0.89	0.90	88	25.1	48	22	5425
HGF10000233	1000	450	2988	201	7.5	3198	0.7	2.3	95.8	96.5	96.7	0.86	0.89	0.90	88	26.6	48	22	5575
HGF14000233	1400	500L	2990	275	7.5	4473	0.7	2.5	95.6	96.5	96.8	0.86	0.91	0.92	90	27.7	35	16	7050
HGF16000233	1600	500B	2990	314	7.5	5111	0.7	2.5	95.8	96.7	97.0	0.86	0.91	0.92	90	31.2	35	16	7530
HGF18000233	1800	560L	2989	352	6.6	5758	0.7	2.5	96.7	97.2	97.3	0.86	0.91	0.92	90	39.7	40	18	9005
HGF20000233	2000	560A	2989	390	6.6	6396	0.7	2.5	96.9	97.4	97.5	0.86	0.91	0.92	90	44.7	40	18	9585

4 Pole - 1500 rpm - 50 Hz

Part No.	Output kW	IEC Frame	Rated speed (rpm)	Full load current I_r (A)	Locked rotor current I_L/I_r	Full load torque T_r (Nm)	Locked rotor torque T_L/T_r	Break-down torque T_b/T_r	415 V % of full load Efficiency η 50	75	100	Power factor (Cos φ) 50	75	100	Sound pressure level dB (A)	Moment of Inertia J (kgm²)	Max. locked rotor time(s) Cold	Hot	Approx Weight (kg)
HGF02000433	200	315C/D/E	1485	43.9	6.3	1285	1.4	2.6	93.7	94.4	94.8	0.70	0.80	0.84	75	5.1	33	15	1780
HGF02200433	220	315C/D/E	1484	47.8	6.3	1413	1.4	2.5	94.0	94.6	94.8	0.73	0.82	0.85	75	5.4	33	15	1810
HGF02500433	250	315C/D/E	1484	54.8	6.3	1609	1.4	2.5	94.2	95.0	95.1	0.71	0.80	0.84	75	5.7	33	15	1840
HGF02800433	280	315C/D/E	1485	61.3	6.3	1805	1.4	2.6	94.3	95.2	95.2	0.71	0.81	0.84	75	6.6	33	15	1930
HGF03150433	315	315C/D/E	1486	68.8	6.8	2021	1.4	2.7	94.5	95.2	95.3	0.71	0.80	0.84	75	7.7	33	15	2050
HGF03550433	355	355C/D/E	1487	75.6	6.0	2286	1.5	2.5	94.5	95.4	95.5	0.75	0.83	0.86	79	10.7	44	20	2740
HGF04000433	400	355C/D/E	1487	84.9	6.0	2570	1.5	2.5	95.0	95.7	95.8	0.75	0.83	0.86	79	11.6	44	20	2830
HGF04500433	450	355C/D/E	1487	95.5	6.2	2894	1.6	2.5	95.1	95.8	95.9	0.74	0.82	0.86	79	13.4	44	20	2950
HGF05000433	500	400L/A/B	1490	108	6.6	3208	1.5	2.7	95.6	96.2	96.2	0.72	0.81	0.84	79	18.1	44	20	3460
HGF05600433	560	400L/A/B	1490	120	6.6	3590	1.5	2.7	95.6	96.1	96.3	0.72	0.81	0.85	79	21.0	44	20	3580
HGF06300433	630	400C/D/E	1491	135	6.9	4042	1.5	2.7	95.7	96.2	96.4	0.72	0.81	0.85	79	25.5	44	20	4580
HGF07100433	710	400C/D/E	1491	153	7.2	4552	1.5	2.7	95.9	96.3	96.5	0.71	0.81	0.84	79	28.4	44	20	4640
HGF08000433	800	450	1491	167	6.7	5131	0.8	2.4	95.7	96.3	96.4	0.76	0.84	0.87	88	20.5	31	14	4900
HGF09000433	900	450	1491	185	6.7	5768	0.8	2.4	95.9	96.5	96.6	0.77	0.85	0.88	88	23.5	31	14	5270
HGF10000433	1000	450	1491	206	6.7	6406	0.8	2.4	96.0	96.6	96.7	0.77	0.85	0.88	88	26.4	31	14	5570
HGF11000433	1100	450	1491	229	6.7	7053	0.8	2.4	96.1	96.7	96.8	0.77	0.84	0.87	88	27.9	31	14	5723
HGF12500433	1250	450	1491	259	7.3	8015	0.8	2.4	96.2	96.8	96.9	0.76	0.84	0.87	88	29.4	31	14	5870
HGF16000433	1600	500L	1494	324	6.9	10232	0.9	2.5	96.5	97.1	97.2	0.80	0.86	0.89	90	46.0	40	18	7145
HGF18000433	1800	500C	1494	364	6.9	11507	0.9	2.5	96.6	97.2	97.3	0.80	0.86	0.89	90	51.1	40	18	7585
HGF20000433	2000	560L	1495	405	6.7	12782	0.7	2.5	96.1	96.8	97.1	0.81	0.87	0.89	90	89.3	57	26	9915
HGF22500433	2250	560B	1495	455	6.7	14381	0.7	2.5	96.2	96.9	97.2	0.81	0.87	0.89	90	99.3	57	26	10535
HGF25000433	2500	630L	1495	501	6.7	15980	0.7	2.5	96.1	96.8	97.0	0.84	0.89	0.90	90	200.4	59	27	12265
HGF28000433	2800	630L	1495	561	6.7	17893	0.7	2.5	96.2	96.9	97.1	0.84	0.89	0.90	90	225.5	59	27	13010
HGF31500433	3150	630C	1495	630	6.7	20130	0.7	2.5	96.3	97.0	97.2	0.84	0.89	0.90	90	254.1	59	27	13860

Notes applicable to pages 32 & 33:
1) The values shown are subject to change without prior notice. To obtain guaranteed values contact your nearest WEG office.
2) Noise level is mean sound pressure at 1 metre as per AS 60034.9 standard.

29. Performance Data - HGF Motors - 3,300V

6 Pole - 1000 rpm - 50 Hz

Part No.	Output kW	IEC Frame	Rated speed (rpm)	Full load current I_r (A)	Locked rotor current I_L/I_r	Full load torque T_r (Nm)	Locked rotor torque T_L/T_r	Break-down torque T_b/T_r	415 V % of full load Efficiency η 50	75	100	Power factor (Cos φ) 50	75	100	Sound pressure level dB (A)	Moment of Inertia J (kgm²)	Max. locked rotor time(s) Cold	Hot	Approx Weight (kg)
HGF01320633	132	315C/D/E	983	29.9	6.0	1285	1.4	2.2	92.6	92.9	93.1	0.69	0.79	0.83	73	7.8	26	12	1740
HGF01600633	160	315C/D/E	983	36.1	6.0	1560	1.4	2.2	93.1	93.4	93.5	0.69	0.79	0.83	73	9.9	26	12	1900
HGF01850633	185	315C/D/E	983	41.5	6.2	1795	1.5	2.3	93.3	93.7	93.9	0.69	0.79	0.83	73	10.8	26	12	1970
HGF02000633	200	315C/D/E	983	44.9	6.2	1942	1.5	2.3	93.0	93.6	93.9	0.72	0.80	0.83	73	11.7	26	12	2040
HGF02000633	220	315C/D/E	983	49.2	6.2	2139	1.5	2.3	93.0	93.7	94.2	0.68	0.78	0.83	73	12.6	26	12	2110
HGF02500633	250	315C/D/E	985	57.3	6.8	2423	1.8	2.6	93.3	93.9	94.2	0.65	0.77	0.81	73	13.5	18	8	2180
HGF02800633	280	355L/A/B	989	63.5	5.5	2708	1.2	2.5	94.3	95.0	95.2	0.65	0.75	0.81	77	13.8	40	18	2450
HGF03150633	315	355C/D/E	989	72.3	5.5	3041	1.2	2.5	94.5	95.1	95.3	0.65	0.76	0.80	77	17.3	40	18	3010
HGF03550633	355	355C/D/E	989	81.3	5.5	3434	1.2	2.5	94.6	95.2	95.5	0.65	0.76	0.80	77	18.4	40	18	3100
HGF04000633	400	355C/D/E	989	91.5	5.7	3865	1.2	2.5	94.6	95.3	95.6	0.64	0.75	0.80	77	20.7	40	18	3150
HGF04500633	450	400L/A/B	990	97.7	6.8	4346	1.5	2.6	95.2	95.7	95.9	0.70	0.80	0.84	77	25.7	44	20	3580
HGF05000633	500	400L/A/B	990	109	6.8	4827	1.5	2.6	95.2	95.7	95.9	0.71	0.81	0.84	77	27.7	44	20	3650
HGF05600633	560	400C/D/E	990	121	6.8	5405	1.5	2.6	95.3	95.7	96.0	0.71	0.81	0.84	77	33.5	44	20	4440
HGF06300633	630	400C/D/E	990	137	6.8	6082	1.5	2.6	95.5	95.9	96.0	0.71	0.81	0.84	77	37.4	44	20	4640
HGF07100633	710	450	992	150	6.3	6838	0.8	2.3	95.6	96.0	96.1	0.76	0.83	0.86	85	33.3	51	23	5123
HGF08000633	800	450	993	169	6.5	7701	0.8	2.4	95.7	96.1	96.1	0.76	0.83	0.86	85	37.8	51	23	5423
HGF09000633	900	450	993	193	6.7	8662	0.8	2.4	95.8	96.2	96.2	0.74	0.82	0.85	85	44.7	51	23	5875
HGF12500633	1250	500L	996	268	6.2	11988	1.2	2.5	96.4	97.0	97.1	0.71	0.81	0.84	85	86.1	42	19	7195
HGF14000633	1400	500B	996	300	6.2	13430	1.2	2.5	96.6	97.2	97.3	0.71	0.81	0.84	85	98.4	42	19	7765
HGF16000633	1600	560L	995	327	5.6	15362	0.8	2.3	96.9	97.2	97.2	0.81	0.86	0.88	88	118.1	66	30	8725
HGF18000633	1800	560L	995	367	5.6	17285	0.8	2.3	97.1	97.4	97.4	0.81	0.86	0.88	88	131.2	66	30	9210
HGF20000633	2000	560B	995	407	5.6	19208	0.8	2.3	97.3	97.6	97.6	0.81	0.86	0.88	88	147.7	66	30	9815
HGF22500633	2250	630C	995	469	5.6	21611	0.9	2.2	96.9	97.4	97.5	0.79	0.84	0.86	90	259.1	37	17	12715

8 Pole - 750 rpm - 50 Hz

Part No.	Output kW	IEC Frame	Rated speed (rpm)	Full load current I_r (A)	Locked rotor current I_L/I_r	Full load torque T_r (Nm)	Locked rotor torque T_L/T_r	Break-down torque T_b/T_r	415 V % of full load Efficiency η 50	75	100	Power factor (Cos φ) 50	75	100	Sound pressure level dB (A)	Moment of Inertia J (kgm²)	Max. locked rotor time(s) Cold	Hot	Approx Weight (kg)
HGF01320833	132	315C/D/E	739	32.6	5.5	1707	1.2	2.3	92.3	93.1	93.3	0.57	0.69	0.76	71	8.4	33	15	1730
HGF01600833	160	315C/D/E	739	39.4	5.5	2070	1.2	2.3	92.5	93.5	93.6	0.57	0.69	0.76	71	10.0	33	15	1850
HGF01850833	185	315C/D/E	739	45.5	5.7	2394	1.2	2.5	92.7	93.5	93.7	0.57	0.69	0.76	71	11.8	26	12	1980
HGF02000833	200	315C/D/E	739	48.5	5.7	2590	1.2	2.5	92.9	93.5	93.7	0.59	0.71	0.77	71	12.7	26	12	2040
HGF02200833	220	355L/A/B	741	52.2	6.0	2835	1.3	2.2	94.2	94.8	94.5	0.62	0.72	0.78	75	14.1	48	22	2440
HGF02500833	250	355C/D/E	741	59.2	6.0	3227	1.3	2.2	94.4	95.0	94.7	0.62	0.72	0.78	75	22.0	48	22	2740
HGF02800833	280	355C/D/E	741	66.2	6.0	3610	1.3	2.2	94.5	95.1	94.9	0.62	0.72	0.78	75	22.0	48	22	2900
HGF03150833	315	355C/D/E	742	75.3	6.2	4052	1.4	2.3	94.6	95.2	95.1	0.60	0.71	0.77	75	19.8	48	22	3050
HGF03550833	355	400L/A/B	741	79.4	6.0	4581	1.1	2.3	94.8	95.3	95.4	0.70	0.80	0.82	75	32.8	48	22	3500
HGF04000833	400	400L/A/B	741	89.3	6.0	5160	1.1	2.3	95.0	95.5	95.6	0.70	0.80	0.82	75	35.1	48	22	3700
HGF04500833	450	400C/D/E	741	100	6.0	5798	1.1	2.5	95.1	95.7	95.8	0.70	0.80	0.82	75	39.7	48	22	4400
HGF05000833	500	400C/D/E	742	112	6.6	6435	1.2	2.5	95.2	95.9	96.0	0.67	0.77	0.81	75	44.3	48	22	4640
HGF05600833	560	450	745	124	5.8	7181	0.8	2.3	95.3	95.9	96.0	0.68	0.78	0.82	80	48.5	66	30	5275
HGF06300833	630	450	744	138	5.8	8093	0.8	2.3	95.5	96.0	96.0	0.69	0.79	0.83	80	54.7	66	30	5570
HGF07100833	710	450	745	156	6.2	9104	0.8	2.3	95.5	96.0	96.0	0.69	0.79	0.83	80	57.9	66	30	5725
HGF09000833	900	500L	746	197	5.5	11527	0.8	2.0	95.9	96.4	96.5	0.72	0.81	0.83	82	111.3	75	34	7260
HGF10000833	1000	500C	746	218	5.5	12812	0.8	2.0	96.1	96.6	96.7	0.72	0.81	0.83	82	124.7	75	34	7745
HGF11200833	1120	560L	746	233	6.4	14342	0.9	2.3	96.1	96.6	96.7	0.80	0.85	0.87	82	230.1	70	32	8955
HGF12500833	1250	560L	746	259	6.4	16010	0.9	2.3	96.3	96.8	96.9	0.80	0.85	0.87	82	257.7	70	32	9510
HGF14000833	1400	560B	746	290	6.4	17933	0.9	2.3	96.5	97.0	97.1	0.80	0.85	0.87	82	294.5	70	32	10245
HGF16000833	1600	630L	746	341	5.5	20493	0.8	1.7	96.1	96.7	96.7	0.79	0.83	0.85	82	341.2	55	25	11840
HGF18000833	1800	630L	746	382	5.5	23054	0.8	1.7	96.3	96.9	96.9	0.79	0.83	0.85	82	379.1	55	25	12455
HGF20000833	2000	630C	746	424	5.5	25614	0.8	1.7	96.5	97.1	97.1	0.79	0.83	0.85	82	426.5	55	25	13220

29. Performance Data - HGF Motors - 6,600V

2 Pole - 3000 rpm - 50 Hz

Part No.	Output kW	IEC Frame	Rated speed (rpm)	Full load current I_r (A)	Locked rotor current I_L/I_r	Full load torque T_r (Nm)	Locked rotor torque T_L/T_r	Break-down torque T_b/T_r	415 V % of full load Efficiency η 50	75	100	Power factor (Cos φ) 50	75	100	Sound pressure level dB (A)	Moment of Inertia J (kgm²)	Max. locked rotor time(s) Cold	Hot	Approx Weight (kg)
HGF02000266	200	315C/D/E	2975	21.3	6.0	643	1.0	2.3	93.1	94.1	94.2	0.77	0.85	0.87	75	3.4	33	15	1730
HGF02200266	220	315C/D/E	2975	23.4	6.0	706	1.0	2.3	93.5	94.3	94.4	0.77	0.85	0.87	75	3.7	33	15	1770
HGF02500266	250	315C/D/E	2975	26.6	6.5	802	1.0	2.3	94.0	94.5	94.6	0.77	0.85	0.87	75	3.9	26	12	1810
HGF02800266	280	355C/D/E	2976	29.1	6.0	899	1.0	2.3	93.4	94.4	94.5	0.83	0.88	0.89	82	5.3	44	20	2490
HGF03150266	315	355C/D/E	2976	32.7	6.3	1010	1.0	2.3	93.7	94.7	94.8	0.83	0.88	0.89	82	5.9	44	20	2590
HGF03550266	355	355C/D/E	2976	36.7	6.3	1138	1.0	2.3	94.0	95.0	95.1	0.83	0.88	0.89	82	6.4	44	20	2670
HGF04000266	400	355C/D/E	2976	41.7	6.5	1285	1.0	2.3	94.3	95.2	95.3	0.80	0.86	0.88	82	6.4	44	20	2670
HGF04500266	450	400L/A/B	2980	47.4	6.5	1442	1.0	2.5	94.8	95.4	95.5	0.80	0.86	0.87	85	10.3	55	25	3400
HGF05000266	500	400C/D/E	2980	51.9	6.5	1599	1.0	2.5	95.0	95.7	95.8	0.81	0.87	0.88	85	12.0	55	25	4130
HGF05600266	560	400C/D/E	2981	58	6.5	1795	1.0	2.5	95.4	95.9	96.0	0.81	0.87	0.88	85	13.7	55	25	4330
HGF06300266	630	400C/D/E	2980	65.1	6.5	2021	1.0	2.5	95.6	96.1	96.2	0.81	0.87	0.88	85	14.5	44	20	4440
HGF07100266	710	450	2987	71.7	7.2	2276	0.8	2.5	94.8	95.6	96.2	0.85	0.89	0.90	88	20.8	44	20	4975
HGF08000266	800	450	2988	80.7	7.2	2560	0.8	2.5	95.1	95.9	96.3	0.85	0.89	0.90	88	23.7	44	20	5275
HGF09000266	900	450	2988	90.7	7.2	2874	0.8	2.5	95.3	96.1	96.5	0.85	0.89	0.90	88	26.6	44	20	5573
HGF12500266	1250	500L	2989	123	7.0	3747	0.7	2.5	95.4	96.3	96.6	0.86	0.91	0.92	90	27.3	44	20	6910
HGF14000266	1400	500B	2989	138	7.0	4199	0.7	2.5	95.6	96.5	96.8	0.86	0.91	0.92	90	31.2	44	20	7440
HGF16000266	1600	560L	2990	157	6.9	4797	0.7	2.5	96.4	97.1	97.2	0.86	0.91	0.92	90	37.3	46	21	9405
HGF18000266	1800	560A	2990	176	6.9	5396	0.7	2.5	96.6	97.3	97.4	0.86	0.91	0.92	90	44.7	46	21	9495

4 Pole - 1500 rpm - 50 Hz

Part No.	Output kW	IEC Frame	Rated speed (rpm)	Full load current I_r (A)	Locked rotor current I_L/I_r	Full load torque T_r (Nm)	Locked rotor torque T_L/T_r	Break-down torque T_b/T_r	415 V % of full load Efficiency η 50	75	100	Power factor (Cos φ) 50	75	100	Sound pressure level dB (A)	Moment of Inertia J (kgm²)	Max. locked rotor time(s) Cold	Hot	Approx Weight (kg)
HGF02000466	200	315C/D/E	1482	22	6.2	1285	1.6	2.3	93.8	94.3	94.5	0.70	0.80	0.84	75	5.4	26	12	1770
HGF02200466	220	315C/D/E	1482	24.2	6.2	1422	1.6	2.3	93.9	94.5	94.7	0.70	0.80	0.84	75	5.8	26	12	1810
HGF02500466	250	315C/D/E	1482	27.4	6.2	1609	1.6	2.3	94.1	94.8	95.0	0.70	0.80	0.84	75	6.6	26	12	1910
HGF02800466	280	315C/D/E	1482	30.7	6.3	1805	1.6	2.3	94.4	94.9	95.1	0.70	0.80	0.84	75	7.2	26	12	1980
HGF03150466	315	355C/D/E	1488	34.1	6.2	2021	1.5	2.5	94.2	95.0	95.2	0.73	0.81	0.85	79	9.8	40	18	2595
HGF03550466	355	355C/D/E	1488	38.3	6.2	2276	1.5	2.5	94.5	95.3	95.4	0.73	0.81	0.85	79	10.7	40	18	2650
HGF04000466	400	355C/D/E	1488	43.1	6.3	2570	1.6	2.5	94.7	95.5	95.6	0.73	0.81	0.85	79	12.5	40	18	2820
HGF04500466	450	400L/A/B	1490	47.6	6.4	2884	1.5	2.5	95.1	95.9	96.1	0.74	0.82	0.86	79	18.1	40	18	3400
HGF05000466	500	400L/A/B	1490	52.9	6.4	3208	1.5	2.5	95.3	96.0	96.2	0.74	0.82	0.86	79	19.6	40	18	3500
HGF05600466	560	400L/A/B	1490	59.8	6.5	3590	1.5	2.5	95.5	96.1	96.3	0.73	0.81	0.85	79	21.0	40	18	3600
HGF06300466	630	400C/D/E	1490	66.5	6.5	4042	1.5	2.5	95.6	96.2	96.4	0.75	0.82	0.86	79	26.9	40	18	4540
HGF07100466	710	400C/D/E	1490	74.8	6.8	4552	1.5	2.5	95.9	96.3	96.5	0.75	0.82	0.86	79	28.4	40	18	4640
HGF08000466	800	450	1491	83.6	6.6	5131	0.9	2.5	95.5	96.1	96.2	0.77	0.84	0.87	88	23.5	44	20	5275
HGF09000466	900	450	1491	94	6.6	5768	0.9	2.5	95.7	96.2	96.3	0.77	0.84	0.87	88	26.4	44	20	5425
HGF10000466	1000	450	1491	104	6.6	6406	0.9	2.5	95.9	96.3	96.4	0.77	0.84	0.87	88	27.9	44	20	5725
HGF11000466	1100	450	1491	115	6.6	7053	0.9	2.5	96.1	96.4	96.5	0.77	0.84	0.87	88	29.4	44	20	5875
HGF12500466	1250	500L	1493	125	6.1	7505	0.7	2.4	96.3	96.9	97.0	0.84	0.89	0.90	90	39.8	53	24	6595
HGF14000466	1400	500L	1493	140	6.1	8407	0.7	2.4	96.4	97.0	97.1	0.84	0.89	0.90	90	45.5	53	24	7075
HGF16000466	1600	500C	1493	160	6.1	9614	0.7	2.4	96.5	97.1	97.2	0.84	0.89	0.90	90	51.1	53	24	7560
HGF18000466	1800	560L	1495	180	6.9	10791	0.6	2.5	96.0	96.7	97.0	0.84	0.89	0.90	90	87.5	84	38	10000
HGF20000466	2000	560B	1495	200	6.9	11998	0.6	2.5	96.1	96.8	97.1	0.84	0.89	0.90	90	94.2	84	38	10190
HGF22500466	2250	630L	1495	226	6.7	13499	0.7	2.5	95.6	96.5	96.8	0.84	0.89	0.90	90	209.4	64	29	11925
HGF25000466	2500	630L	1495	251	6.7	14990	0.7	2.5	95.7	96.6	96.9	0.84	0.89	0.90	90	234.5	64	29	12600

** Only for terminal box on top*

Notes applicable to pages 34 & 35:
1) The values shown are subject to change without prior notice. To obtain guaranteed values contact your nearest WEG office.
2) Noise level is mean sound pressure at 1 metre as per AS 60034.9 standard.

29. Performance Data - HGF Motors - 6,600V

6 Pole - 1000 rpm - 50 Hz

Part No.	Output kW	IEC Frame	Rated speed (rpm)	Full load current I_r (A)	Locked rotor current I_L/I_r	Full load torque T_r (Nm)	Locked rotor torque T_L/T_r	Break-down torque T_b/T_r	415 V % of full load Efficiency η 50	75	100	Power factor (Cos φ) 50	75	100	Sound pressure level dB (A)	Moment of Inertia J (kgm²)	Max. locked rotor time(s) Cold	Hot	Approx Weight (kg)
HGF01320666	132	315C/D/E	984	15.5	5.5	1285	1.2	2.4	92.6	93.2	93.3	0.64	0.75	0.80	73	4.6	44	20	1665
HGF01600666	160	315C/D/E	984	18.7	5.5	1550	1.2	2.4	93.1	93.6	93.8	0.64	0.75	0.80	73	5.9	44	20	1810
HGF01850666	185	315C/D/E	984	21.5	5.5	1795	1.2	2.4	93.3	93.8	94.0	0.64	0.75	0.80	73	6.8	44	20	1910
HGF02000666	200	315C/D/E	984	23.2	5.5	1942	1.2	2.4	93.5	94.0	94.1	0.64	0.75	0.80	73	7.3	44	20	1980
HGF02200666	220	315C/D/E	984	25.5	5.5	2139	1.2	2.4	93.6	94.0	94.2	0.64	0.75	0.80	73	7.3	44	20	1980
HGF02500666	250	355C/D/E	990	28.8	5.9	2413	1.2	2.5	94.0	94.7	94.8	0.63	0.75	0.80	77	13.8	33	15	2670
HGF02800666	280	355C/D/E	990	32.2	5.9	2698	1.2	2.5	94.1	94.9	95.0	0.63	0.75	0.80	77	16.1	33	15	2820
HGF03150666	315	355C/D/E	990	36.2	5.9	3041	1.2	2.5	94.4	95.1	95.2	0.63	0.75	0.80	77	18.4	33	15	2980
HGF03550666	355	355C/D/E	990	40.7	5.9	3424	1.2	2.5	94.5	95.3	95.4	0.63	0.75	0.80	77	19.5	33	15	3050
HGF04000666	400	400L/A/B	990	43.7	6.2	3865	1.2	2.5	95.0	95.4	95.4	0.72	0.81	0.84	77	19.7	44	20	3500
HGF04500666	450	400C/D/E	990	49	6.2	4346	1.2	2.5	95.1	95.6	95.6	0.72	0.81	0.84	77	22.7	44	20	4230
HGF05000666	500	400C/D/E	990	54.4	6.2	4827	1.2	2.5	95.3	95.8	95.8	0.72	0.81	0.84	77	25.7	44	20	4440
HGF05600666	560	400C/D/E	990	60.7	6.2	5405	1.2	2.5	95.5	96.0	96.0	0.71	0.80	0.84	77	28.7	44	20	4640
HGF06300666	630	450	993	66.8	6.5	6063	1.0	2.5	95.4	96.0	96.0	0.76	0.83	0.86	85	35.4	44	20	5200
HGF07100666	710	450	993	75.2	6.5	6828	1.0	2.5	95.6	96.1	96.1	0.76	0.83	0.86	85	37.8	44	20	5425
HGF08000666	800	450	994	84.5	6.8	7691	1.1	2.7	95.8	96.3	96.3	0.75	0.82	0.86	85	44.7	44	20	5875
HGF09000666	900	450	994	96.2	6.8	8652	1.0	2.7	95.8	96.3	96.3	0.75	0.81	0.85	85	44.7	44	20	5875
HGF11200666	1120	500L	995	118	6.0	10094	1.0	2.4	96.2	96.7	96.8	0.76	0.83	0.86	85	82.5	40	18	6980
HGF12500666	1250	500B	995	131	6.0	11262	1.0	2.4	96.4	96.9	97.0	0.76	0.83	0.86	85	92.4	40	18	7435
HGF14000666	1400	560L	995	144	5.5	12616	0.8	2.1	96.6	97.0	97.0	0.82	0.87	0.88	88	110.3	62	28	8440
HGF16000666	1600	560L	995	164	5.5	14421	0.8	2.1	96.8	97.2	97.2	0.82	0.87	0.88	88	124.0	62	28	8950
HGF18000666	1800	560B	995	184	5.5	16216	0.8	2.1	97.0	97.4	97.4	0.82	0.87	0.88	88	137.8	62	28	9460
HGF02000666	2000	630C	995	204	5.6	18021	1.0	2.2	96.8	97.3	97.4	0.80	0.86	0.88	90	259.1	42	19	12710

8 Pole - 750 rpm - 50 Hz

Part No.	Output kW	IEC Frame	Rated speed (rpm)	Full load current I_r (A)	Locked rotor current I_L/I_r	Full load torque T_r (Nm)	Locked rotor torque T_L/T_r	Break-down torque T_b/T_r	415 V % of full load Efficiency η 50	75	100	Power factor (Cos φ) 50	75	100	Sound pressure level dB (A)	Moment of Inertia J (kgm²)	Max. locked rotor time(s) Cold	Hot	Approx Weight (kg)
HGF01600866	160	355L/A/B	741	19.4	5.6	2060	1.2	2.2	93.0	93.4	93.5	0.60	0.71	0.77	75	10.9	44	20	2160
HGF01850866	185	355C/D/E	741	22.1	5.6	2384	1.2	2.2	93.4	93.8	93.9	0.61	0.72	0.78	75	12.3	44	20	2540
HGF02000866	200	355C/D/E	741	23.9	5.6	2580	1.2	2.2	93.5	93.9	94.0	0.61	0.72	0.78	75	14.1	44	20	2670
HGF02200866	220	355C/D/E	741	26.2	5.6	2835	1.2	2.2	93.7	94.1	94.2	0.61	0.72	0.78	75	16.4	44	20	2820
HGF02500866	250	355C/D/E	741	30.9	5.8	3227	1.3	2.5	93.8	94.2	94.3	0.57	0.69	0.75	75	17.5	33	15	2900
HGF02800866	280	400L/A/B	740	31.6	6.0	3620	1.1	2.3	94.5	94.6	94.6	0.70	0.79	0.82	75	30.4	42	19	3500
HGF03150866	315	400L/A/B	740	35.4	6.0	4071	1.1	2.3	94.7	94.8	94.8	0.70	0.79	0.82	75	35.0	42	19	3700
HGF03550866	355	400C/D/E	740	39.9	6.0	4581	1.1	2.3	94.9	95.0	95.0	0.70	0.79	0.82	75	37.4	42	19	4330
HGF04000866	400	400C/D/E	740	44.9	6.0	5160	1.1	2.3	94.9	95.0	95.0	0.70	0.79	0.82	75	39.7	42	19	4440
HGF04500866	450	400C/D/E	740	49.7	6.0	5808	1.1	2.3	95.1	95.4	95.4	0.69	0.79	0.81	75	44.3	42	19	4640
HGF05000866	500	450	745	55.1	5.5	6416	0.9	2.3	95.2	95.6	95.6	0.70	0.79	0.83	80	54.8	66	30	5575
HGF05600866	560	450	745	61.7	5.5	7181	0.9	2.3	95.2	95.7	95.7	0.70	0.79	0.83	80	54.8	66	30	5725
HGF06300866	630	450	745	69.2	5.5	8083	0.9	2.3	95.3	95.9	95.9	0.70	0.79	0.83	80	65.4	66	30	6085
HGF07100866	710	450	745	79.9	5.8	9104	1.0	2.4	95.5	96.0	96.0	0.67	0.77	0.81	80	65.4	48	22	6085
HGF08000866	800	500L	746	87.6	5.5	9614	0.8	2.0	95.7	96.3	96.3	0.72	0.81	0.83	82	112.0	79	36	7265
HGF09000866	900	500C	746	98.3	5.5	10820	0.8	2.0	95.9	96.5	96.5	0.72	0.81	0.83	82	124.4	79	36	7715
HGF10000866	1000	560L	746	109	5.5	12017	1.0	2.0	95.3	96.1	96.3	0.74	0.81	0.83	82	115.1	53	24	8300
HGF11200866	1120	560L	746	122	5.5	13459	1.0	2.0	95.5	96.3	96.5	0.74	0.81	0.83	82	233.4	53	24	8985
HGF12500866	1250	560B	746	136	5.5	15029	1.0	2.0	95.7	96.5	96.7	0.74	0.81	0.83	82	261.4	53	24	9540
HGF14000866	1400	630L	746	147	5.5	16824	1.0	1.8	96.1	96.6	96.6	0.81	0.85	0.86	82	341.1	51	23	11785
HGF16000866	1600	630L	746	168	5.5	19228	1.0	1.8	96.3	96.8	96.8	0.81	0.85	0.86	82	383.8	51	23	12470
HGF18000866	1800	630C	746	189	5.5	21631	1.0	1.8	96.5	97.0	97.0	0.81	0.85	0.86	82	426.4	51	23	13155

30. HGF Motors Mechanical Data - Anti Friction Bearing

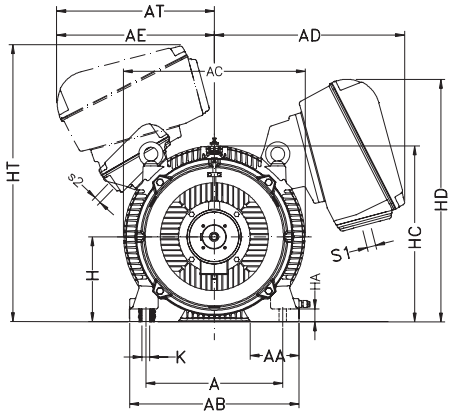

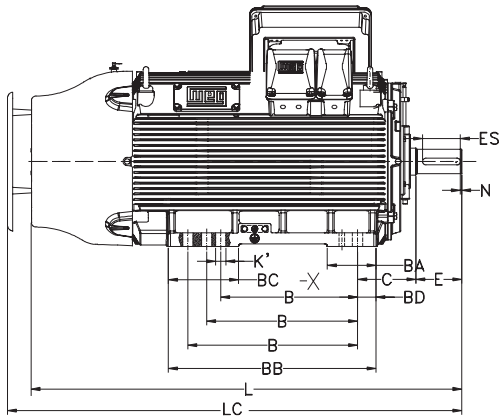

2 Pole - 3000 rpm - 50 Hz

IEC Frame	Main Dimensions (mm)																										Bearings	
	A	AA	AB	AC	AD	AE	AT*	B	BA	BC	BB	BD	C	E	ES	N	H	HA	HC	HD	HT*	K	K'	L	LC	s1	s2	D.E.	N.D.E.
315 C/D/E	508	180	628	675	710	435	585	710 800 900	180	340	1050	68	216	140	125	5	315	47.5	655	905	1030	28	38	1870	1995	2 x M63	3 x M20	6314 C3	6314 C3
355 L/A/B	610	230	750	765	745	455	615	630 710 800	200	380	1000	80	254	140	125	5	355	50	740	970	1095	28	48	1775	1895	2 x M63	3 x M20	6314 C3	6314 C3
355 C/D/E	610	230	750	765	745	455	615	900 1000 1120	200	380	1300	80	254	140	125	5	355	50	740	970	1095	28	48	2075	2195	2 x M63	3 x M20	6314 C3	6314 C3
400 L/A/B	686	218	840	875	780	495	650	710 800 900	220	360	1070	80	280	140	125	5	400	50	840	1055	1180	36	56	2115	2240	2 x M63	3 x M20	6315 C3	6315 C3
400 C/D/E	686	218	840	875	780	495	650	1000 1120 1250	220	415	1425	80	280	140	125	5	400	50	840	1055	1180	36	56	2415	2540	2 x M63	3 x M20	6315 C3	6315 C3
450 L/A/B/C/D	750	250	950	1000	820	535	720	800 900 1000 1120 1250	230	660	1450	90	315	170	140	5	450	60	950	1170	1270	36	56	2485	-	2 x M63	3 x M20	6220 C3	6220 C3

4 Pole 3000 rpm - 6 Pole 1500 rpm - 8 Pole 750 rpm - 50Hz

IEC Frame	Main Dimensions (mm)																										Bearings	
	A	AA	AB	AC	AD	AE	AT*	B	BA	BC	BB	BD	C	E	ES	N	H	HA	HC	HD	HT*	K	K'	L	LC	s1	s2	D.E.	N.D.E.
315 C/D/E	508	180	628	675	710	435	585	710 800 900	180	340	1050	68	216	170	140	5	315	47.5	655	905	1030	28	38	1900	2025	2 x M63	3 x M20	6320 C3	6316 C3
355 L/A/B	610	230	750	765	745	455	615	630 710 800	200	380	1000	80	254	210	170	5	355	50	740	970	1095	28	48	1845	1965	2 x M63	3 x M20	6322 C3	6320 C3
355 C/D/E	610	230	750	765	745	455	615	900 1000 1120	200	380	1300	80	254	210	170	5	355	50	740	970	1095	28	48	2145	2265	2 x M63	3 x M20	6322 C3	6320 C3
400 L/A/B	686	218	840	875	780	495	650	710 800 900	220	360	1070	80	280	210	170	5	400	50	840	1055	1180	36	56	2185	2310	2 x M63	3 x M20	NU 224 C3	6320 C3
400 C/D/E	686	218	840	875	780	495	650	1000 1120 1250	220	415	1425	80	280	210	170	5	400	50	840	1055	1180	36	56	2485	2610	2 x M63	3 x M20	NU 224 C3	6320 C3
450 L/A/B/C/D	750	250	950	1000	820	535	720	800 900 1000 1120 1250	230	660	1450	90	315	250	200	5	450	60	950	1170	1270	36	56	2485	-	2 x M63	3 x M20	6328 C3	6322 C3
500 L/A/B/C/D	850	275	1050	1100	860	575	760	900 1000 1120 1250 1400	300	450	1660	150	375	250	200	5	500	65	1050	1250	1355	42	62	2730	-	2 x M63	3 x M20	6330 C3	6324 C3
560 L/A/B/C/D	950	320	1200	1220	905	615	800	1000 1120 1250 1400 1600	400	500	1900	180	400	250	200	5	560	70	1174	1360	1465	42	62	2850	-	2 x M63	3 x M20	NU 228 C3 and 6228 C3	NU 224 C3
630 L/A/B/C/D	1250	330	1440	1400	970	685	870	1000 1120 1250 1400 1600	450	600	2000	180	450	250	200	5	630	80	1360	1480	1585	42	72	3260	-	2 x M63	3 x M20	NU 232 C3 and 6232 C3	NU 224 C3

Note: For forced cooling add 250mm in the dimension "L"

30. HGF Motors Mechanical Data - Sleeve Bearing

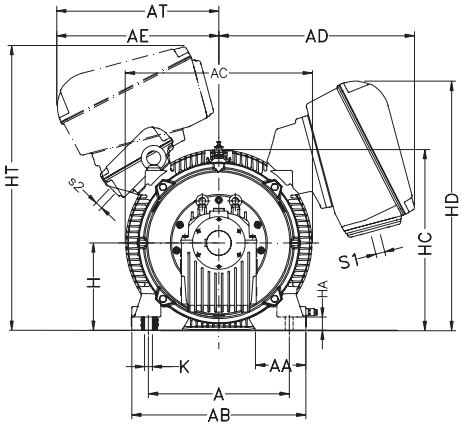

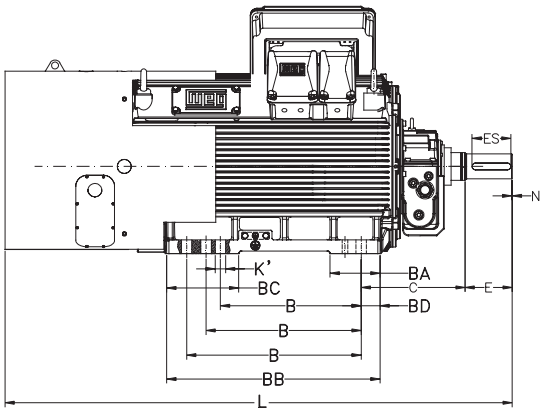

2 Pole - 3000 rpm - 50 Hz

IEC Frame	Main Dimensions (mm)																										Bearings	
	A	AA	AB	AC	AD	AE	AT*	B	BA	BC	BB	BD	C	E	ES	N	H	HA	HC	HD	HT*	K	K'	L	LC	s1	s2	D.E.	N.D.E.
315 C/D/E	508	180	628	700	710	430	585	710 800 900	180	340	1050	68	375	140	125	5	315	47.5	655	900	1025	28	38	1830	1995	2 x M63 x 1.5	3 x M20 x 1.5	FNLB 9-80	FNLQ 9-80
355 L/A/B	610	230	750	780	740	450	615	630 710 800	200	380	1000	80	425	140	125	5	355	50	745	965	1095	28	48	2135	1895	2 x M63 x 1.5	3 x M20 x 1.5	FNLB 9-80	FNLQ 9-80
355 C/D/E	610	230	750	765	745	455	615	900 1000 1120	200	380	1300	80	425	140	125	5	355	50	745	965	1095	28	48	2435	2195	2 x M63 x 1.5	3 x M20 x 1.5	FNLB 9-80	FNLQ 9-80
400 L/A/B	686	218	840	890	780	490	650	710 800 900	220	360	1070	80	450	140	125	5	400	50	845	1050	1175	36	56	2450	2240	2 x M63 x 1.5	3 x M20 x 1.5	FNLB 9-80	FNLQ 9-80
400 C/D/E	686	218	840	890	780	490	650	1000 1120 1250	220	415	1425	80	450	140	125	5	400	50	845	1050	1175	36	56	2750	2540	2 x M63 x 1.5	3 x M20 x 1.5	FNLB 9-80	FNLQ 9-80
450	750	250	950	1000	820	535	720	800 900 1000 1120 1250	230	660	1450	90	475	170	140	5	450	60	950	1165	1270	36	56	2805	-	2 x M63 x 1.5	3 x M20 x 1.5	FNLB 9-80	FNLQ 9-80
500	850	275	1050	1100	855	575	760	900 100 1120 1250 1400	300	450	1660	150	500	210	200	5	500	65	1050	1245	1355	45	62	3115	-	2 x M63 x 1.5	3 x M20 x 1.5	FNLB 11-125	FNLQ 11-125
560	950	320	1200	1220	915	615	800	1000 1120 1250 1400 1600	400	500	1900	180	560	250	200	5	560	70	1174	1360	1465	36	62	3130	-	2 x M63 x 1.5	3 x M20 x 1.5	Contact WEG	
630	1250	330	1440	1400	965	685	870	1000 1120 1250 1400 1600	450	600	2000	180	600	250	200	5	630	80	1360	1474	1585	42	72	3400	-	2 x M63 x 1.5	3 x M20 x 1.5	Contact WEG	

Note: For forced cooling add 250mm in the dimension "L"

30. HGF Motors Mechanical Data - Sleeve Bearing

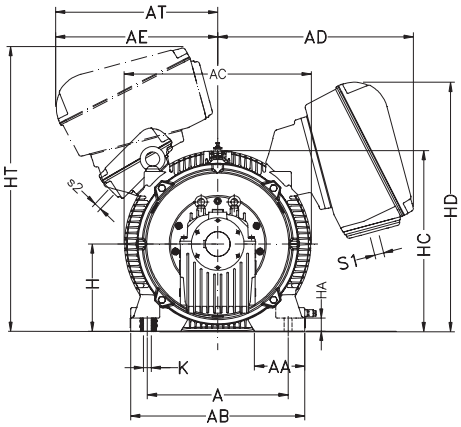

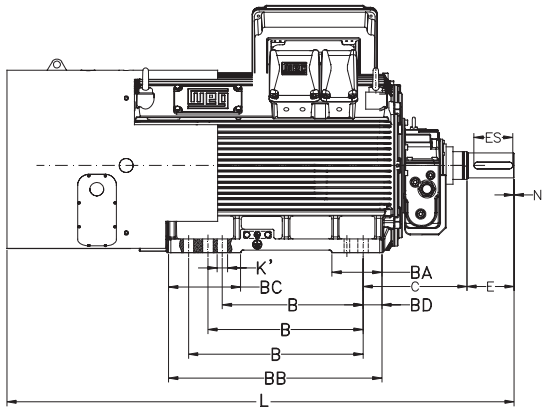

4 Pole 3000 rpm - 6 Pole 1500 rpm - 8 Pole 750 rpm - 50Hz

IEC Frame	Main Dimensions (mm)																											Bearings	
	A	AA	AB	AC	AD	AE	AT*	B	BA	BC	BB	BD	C	E	ES	N	H	HA	HC	HD	HT*	K	K'	L	LC	s1	s2	D.E.	N.D.E.
315 C/D/E	508	180	628	700	710	430	585	710 800 900	180	340	1050	68	375	170	140	5	315	47.5	655	900	1025	28	38	2130	1995	2 x M63 x 1.5	3 x M20 x 1.5	FNLB 9-90	FNLQ 9-90
355 L/A/B	610	230	750	780	740	450	615	630 710 800	200	380	1000	80	425	210	170	5	355	50	745	965	1095	28	48	2070	1895	2 x M63 x 1.5	3 x M20 x 1.5	FNLB 9-100	FNLQ 9-100
355 C/D/E	610	230	750	765	745	455	615	900 1000 1120	200	380	1300	80	425	210	170	5	355	50	745	965	1095	28	48	2370	2195	2 x M63 x 1.5	3 x M20 x 1.5	FNLB 9-100	FNLQ 9-100
400 L/A/B	686	218	840	890	780	490	650	710 800 900	220	360	1070	80	450	210	170	5	400	50	845	1050	1175	36	56	2390	2240	2 x M63 x 1.5	3 x M20 x 1.5	FNLB 11-110	FNLQ 11-110
400 C/D/E	686	218	840	890	780	490	650	1000 1120 1250	220	415	1425	80	450	210	170	5	400	50	845	1050	1175	36	56	2690	2540	2 x M63 x 1.5	3 x M20 x 1.5	FNLB 11-110	FNLQ 11-110
450	750	250	950	1000	820	535	720	800 900 1000 1120 1250	230	660	1450	90	475	250	140	5	450	60	950	1165	1270	36	56	2805	-	2 x M63 x 1.5	3 x M20 x 1.5	FNLB 11-125	FNLQ 11-125
500	850	275	1050	1100	855	575	760	900 100 1120 1250 1400	300	450	1660	150	500	210	200	5	500	65	1050	1245	1355	45	62	3115	-	2 x M63 x 1.5	3 x M20 x 1.5	FNLB 11-125	FNLQ 11-125
560	950	320	1200	1220	915	615	800	1000 1120 1250 1400 1600	400	500	1900	180	560	250	200	5	560	70	1174	1360	1465	36	62	3130	-	2 x M63 x 1.5	3 x M20 x 1.5	Contact WEG	
630	1250	330	1440	1400	965	685	870	1000 1120 1250 1400 1600	450	600	2000	180	600	250	200	5	630	80	1360	1474	1585	42	72	3400	-	2 x M63 x 1.5	3 x M20 x 1.5	Contact WEG	

30. HGF Motors Mechanical Data

Shaft Dimensions - Drive End (D.E.)

Shaft Dimensions (mm)					
IEC Frame	ØD	F	G	GD	d1
2 Pole					
315 / 355	65	18	58	11	DM20
400	70	20	62.5	12	DM20
450	85	22	76	14	DM20

Shaft Dimensions (mm)					
IEC Frame	OD	F	G	GD	d1
4, 6 & 8 Pole					
315	90	25	81	14	DM24
355	100	28	90	16	DM24
400	110	28	100	16	DM24
450	120	32	109	18	DM24
500	120	32	109	18	DM24
560	130	32	119	18	DM24
630	150	36	138	20	DM30

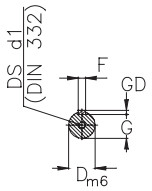

Flange dimensions

IEC Frame	Flange dimensions (mm)							No. of holes
	Flange	C	ØM	ØN	ØP	T	S	
315	FF-600	216	600	550	660	6	24	8
355	FF-740	254	740	680	800	6	24	8
400	FF-940	280	940	880	1000	6	28	8
450	FF-1080	315	1080	1000	1150	6	28	8
500	FF-1180	375	1180	1120	1100	6	28	8
560	FF-1180	400	1180	1120	1250	6	28	8
630	FF-1500	450	1500	1400	1600	8	28	12

Flange dimensions

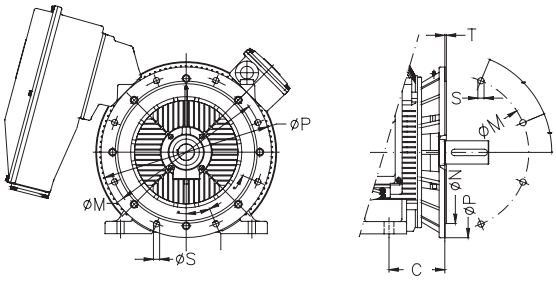

Terminal box dimensions

IEC Frame	Terminal box dimensions (mm)											
	AD'A	HD'A	AD'B	HD'B	AD'C	HD'C	AD'D	HD'D	AD'E	HD'E	AD'F	HD'F
315	710	905	850	920	920	980	970	1020	1170	1065	1290	1375
355	740	965	880	985	950	1050	1005	1085	1200	1130	1320	1445
400	780	1050	915	1070	990	1030	1045	1170	1270	1215	1360	1540
450	820	1245	965	1185	1030	1250	1085	1295	1320	1330	1400	1640
500	855	1215	1010	1265	1070	1330	1130	1350	1370	1415	1440	1720
560	915	1375	1070	1385	1130	1460	1185	1480	1430	1540	1500	1850
630	965	1480	1140	1500	1175	1560	1250	1580	1500	1645	1545	1950

Standard Terminal box dimensions

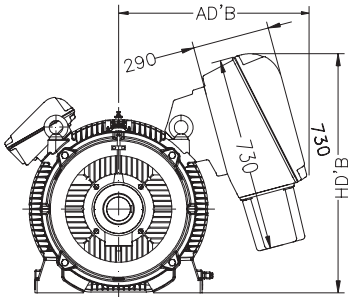

Cast iron terminal box(Up to 6.9 kV)

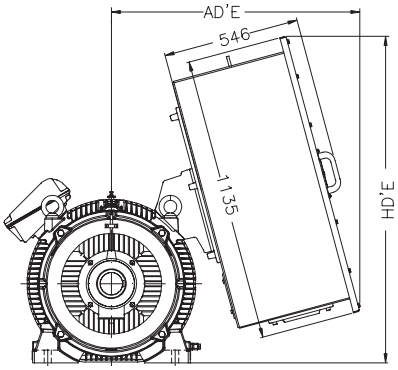

Steel terminal box (Up to 11 kV)

Optional Oversized Terminal box dimensions

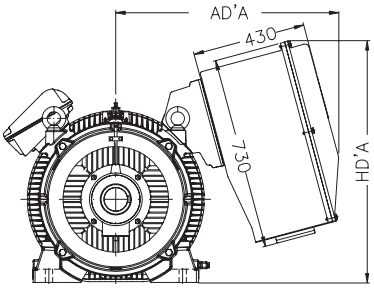

Steel terminal box (Up to 5 kV)

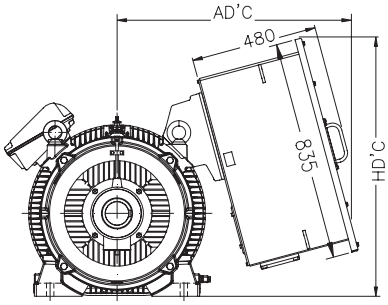

Steel terminal box (Up to 1 kV)

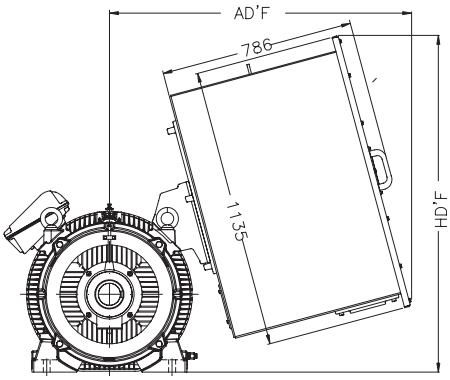

Steel terminal box (For capacitors and lighting arrestors)

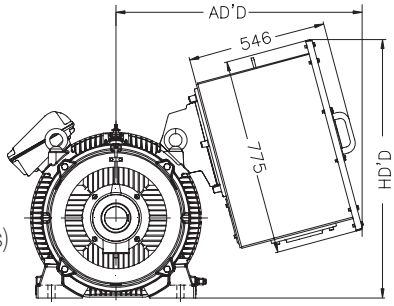

Cast iron terminal box (Up to 1 kV)

Manage your equipment effectively with WEG.

HV Motors to 50,000kW

MAF (WRIM) Line to 50,000kW

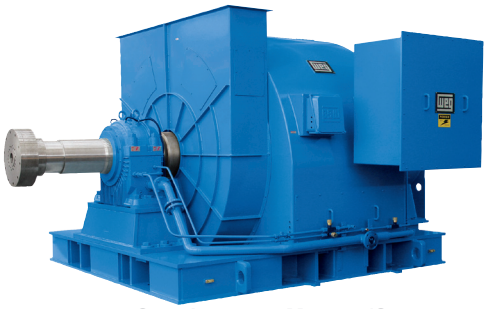

Synchronous Motors /Generators to 60,000kW

CFW11 Variable Frequency Drive
0.75 to 550kW, 380-480V with Internal PLC functionality (soft PLC) and Optimal Flux

CFW08 "Wash Duty" "IP66" Variable Frequency Drive
0.75 to 15kW, 220-240V and 380-480V with IP66 protection rating

CFW11 "IP54" Variable Frequency Drive
0.75 to 110kW, 380-480V with Internal PLC functionality (soft PLC) and Optimal Flux

Optimal FLUX

SSW06 Soft Starter
Available range 2.2 to 1,950kW, 220 to 690V with Multi-motor start and motor protection features

AFW11 Modular Drive
Power range from 300 to 3,000kW, 380 to 690V, available in kits for easy cubicle configuration and assembly

SSW7000 Medium Voltage Soft Starter
Power range from 1,120 to 2,500kW, 2.3 to 6.9kV. Line and by-pass contactor built-in.

MVW01 Medium Voltage Drive
Power range from 400 to 6,000kW, 2.3 to 6.6kV, the most efficient medium voltage drive on the market